SAGOLA®

an Elcometer company

# 2023

# BODYSHOP AND INDUSTRIAL BODYSHOP

## PROFESSIONAL EQUIPMENT

For more than **68 years** we have worked hard to be the best at what we do, so you can be the best at what you do.

## Since 1955

SAGOLA can trace its origins to the year 1955 and is fruit of the pioneering spirit of its founder, **Alejandro Sánchez Larrauri**.

It began as a small subcontracting workshop for industry. After some years in the subcontracting sector, Larrauri felt the need to manufacture his own product and progressively withdrew from subcontracted activity.

## International expantion

Due once again to the entrepreneurial spirit of the SAGOLA team, the need was felt to open the company to the international market. For that reason the Company began operating in related markets such as Latin America, where it soon became the indisputable leader, later expanding to Arab countries, Asia and finally Europe. Today, SAGOLA is present in more than 80 countries worldwide.

SAGOLA has maintained the highest quality standards in the manufacture of its products from its very beginnings, which has contributed to becoming a very important competitor in sectors such as bodyshop and industry.

## Elcometer Group

In 2020, SAGOLA has became part of a much larger business group. The ELCOMETER Group. Headquartered in the UK, Elcometer is also a family business and has been owned by the Sellars family for seven generations. Beginning in the 19th century as a chemical company, Elcometer, headquartered in Manchester, UK, has grown into one of the world's leaders in the design, manufacture and supply of equipment for the coating and non-destructive testing industries (END).

Elcometer exports more than 90% of the products it manufactures through its offices in France, Germany, Japan, the Netherlands, Singapore, the United Arab Emirates and the USA and its global distribution network that covers more than 170 countries throughout the world.

Like Sagola, the philosophy of the Elcometer company is to integrate quality into all aspects of the products they design and manufacture, while being very aware of the environment that surrounds us. Elcometer's commitment is reflected in its ISO 9001 and 14001 Quality and Environmental accreditations.

# Evolution and Innovation

Since our beginnings, SAGOLA has always maintained the highest quality standards in its products and production processes, facilitating the most demanding coating processes.

All of this has made SAGOLA what it is today, a company and a brand recognised not only in the domestic market, but in more than 80 countries worldwide.

**We have 68 years of experience as manufacturers of spray guns and spraying equipment**

After 68 years making and developing new products, we are convinced of the need to establish a close relation with our clients on a day-to-day basis.

We know that the best product is based on the proper development of what is demanded by the market at each moment in time. For that reason we constantly reinforce our training and sales and marketing personnel, which is in permanent contact with the market and its needs all over the world.

The quality of our products is acknowledged in more than eighty countries. SAGOLA has a vast experience and owns know-how in the manufacture of professional coating systems.

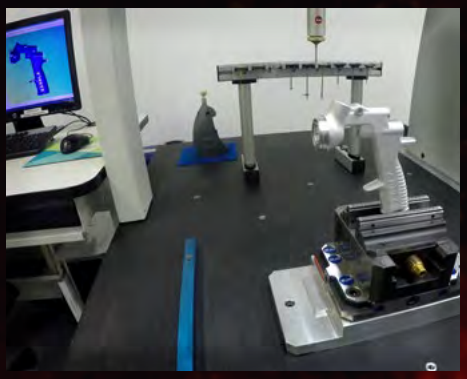

## Human resources

SAGOLA is a worldwide benchmark brand thanks to the highly qualified professionals in our team. Notwithstanding, this team continues to work towards the objective of consolidating the SAGOLA brand as the industry yardstick.

**Strengthening our human resources is SAGOLA's principal objective**

Since its inception, SAGOLA has been characterized by merging manufacturing technologies, production means and manufacturing processes with a highly qualified human team.

The **high technical level** of our production guarantees the **high quality** of our products.

# Research and Development

Our commitment to R+D is absolutely clear. We devote all our efforts in this department to assuring that our products are adapted to the needs of the market.

Our objective is that between both parties and the innovations generated at our headquarters, clients will regard SAGOLA as a safe bet and stay loyal to a brand which researches on a day-to-day basis to develop products which answer their needs.

**Optimisation and Self-improvement**

When it comes to service we are talking about a deeply rooted culture arising from the history of SAGOLA, to which service is vital.

The robotic automation of all our warehouses is an example, a major investment which gives us and advantage over the competition when it comes to offering a fast, reliable response which the market appreciates.

# The quality as a brand

If the SAGOLA brand plays an important role on the market after 67 years of history, this is due to the emphasis placed on QUALITY.

At our factory in Vitoria (Spain), each department you visit is steeped in an atmosphere of quality.

At the beginning the founder, Alejandro Sánchez, was able to transmit this vital concept and 67 years later his heritage on this point remains as vital as on the first day.

# Warranty

SAGOLA provides a 3-year guarantee with the main products.

We know this is the best way of showing our customers that we believe in our products and that our guarantee will make our past and present customers loyal in the future.

From its very beginnings SAGOLA has showed marked interest in advances related to care of and **respect** for the **environment**.

## Environment

Since the very first developments regarding VOC emissions to the atmosphere, SAGOLA wanted to be a cutting-edge company by implementing new environmental regulations and systems for its products.

With the inclusion of EPA and HVLP systems, as well as progress made in the field of filtration and others, we believe that we can contribute on a daily basis through new developments in our innovation policy.

**Our commercial office and training team are amongst the pillars of the SAGOLA BRAND worldwide**

Our training team and the entire company believes that there is an important difference between being merely a quality manufacturer and being a manufacturer which develops and trains workgroups for the various sectors in which we are present.

## Sales and Marketing

We believe that the products we make always need a solid sales support. Our commercial partners all over the world appreciate our assistance in setting up their sales networks and technical teams.

Thanks to the efforts of both, we embark upon each new financial year resting on a solid base suitable for the construction of a long-term project. Courses are available both at our Vitoria headquarters and on site.

## Customer service

This department is aware that our sales effort requires its support when responding to particular dilemmas, problems or needs related to specific queries we are constantly receiving from all over the world. These are transmitted rapidly to qualified experts who provide immediate data and solutions.

The sectors in which we have traditionally had a presence have always considered us a leading brand, but to stay that way all the players in each sector demand that our developments take account of the changes taking place in each field. We therefore have different product lines for each segment in accordance with its needs.

## Bodyshop

This is the sector most often identified with SAGOLA, and in many ways the sector which sets the standard for all the others as far as paints and performance are concerned.

Apart from our list of annexes, for this sector we detail our star products in quality and sales volume.

## Industrial Vehicle

This sector recognises in SAGOLA an established manufacturer of coating spray guns and equipment. The brand is closely associated with reliability, quality and convenience at work, contributing confidence to the comercial vehicle distribution network.

## Industrial Supplies

This is a constantly developing sector in which SAGOLA has always been the reference, with special finishes equipment for pressure and special pumps for products specifically developed for this sector.

## Dedicated to continuous improvement in **quality**, **service** and **management**.

Our business partners are aware that SAGOLA, as well as contributing a quality brand, provides them with a manufacturer who has won their loyalty by dint of constant effort over the years. This is something we strive for every day.

We are aware that our development and innovation will be our best allies along with the loyalty of our users in the future.

**SAGOLA has always been export-oriented and has achieved a notable expansion**

We have always had an export-oriented attitude. We are currently present in more than 80 countries and keep on growing to ensure that our brand, and the products it represents, reach the entire world with the invaluable help and support of our importers.

The **loyalty** of our users is one of our closest allies, in conjunction with **innovation**.

All **painting guides** are available on our website.

## Approved Manufacturers

Our relationship with painting manufacturers around the world means that launching SAGOLA in a new market is easier for us.

Our homologations make the market more active because users know that the product they are buying has been tested and homologated by their paint brand.

For many years, SAGOLA has devoted all its efforts not only on improving the quality of its products and service, but also to improve all aspects related with management, HR, environment, etc.

More than 60 industrial patents/models registered worldwide CEE / UK / ASIA/ USA:

- Manual Spray Guns
- Automatic Spray Guns
- Packing Nuts
- Blow Guns
- Air Caps
- Valves
- Deposits
- Keys, Accessories

As a reference it is worth noting that SAGOLA was one of the first companies in Spain to obtain ISO certification, which meant a new management model where improvisation was forgotten and gave way to a management organization fully controlled and automated.

In 2023, Sagola received Nadcap® accreditation for demonstrating their ongoing commitment to quality by satisfying customer requirements and industry specifications.

SYSTEM CERTIFICATION
CERTIFICATION DE SYSTÈMES
ISO 9001
SGS

AS 9100D
CERTIFIED
ISO 9001

Nadcap
Administered by PRI
ACCREDITED
Chemical Processing

The commitment to the environment by SAGOLA has always been one of its main objectives. This is the reason why SAGOLA has been a pioneer in the manufacture of equipment for low-emission paint solvent to the atmosphere. We were pioneers in meeting environmental regulations as strict as the 1151 of the US California State SCAQMD.

On the other hand the commitment to uphold the highest standards of security makes the manufacture of our products to evolution continuously in its design and manufacturing process. Therefore our standard products meet CE, ATEX, IP54, etc.

SAGOLA is a company which spends significant resources in R&D and is always in constant evolution. As a result of this investigation and due to the need of protection of our own Know-how, SAGOLA is very active in all related with the intellectual property, being owner of a large number of patents worldwide.

Undoubtedly, SAGOLA is a recognized brand worldwide so in this aspect, the protection levels of our brand worldwide are very high.

SAGOLA has got registered its different brands (SAGOLA, DEFYNIK and DELON) practically worldwide.

SAGOLA®
an Elcometer company

# Our History

**1955**
SAGOLA foundation as a subcontracting company

**1960**
SAGOLA begins manufacturing spray guns. Launches the Sagola ALM 401

**1966**
Expansion of SAGOLA facilities

**1973**
Due to its growth, SAGOLA builds the new facilities

**1980**
Sagola is a leader in Spain, Arab countries and Latin America

**1990**
Sagola launches its low-emission solvent products on the market. One of the top three manufacturers worldwide

**1999**
Sagola launches the 4200 G spray gun

**2007**
Sagola launches its first interchangeable HVLP air nozzle

**2010**
Sagola exports to more than 80 countries

**2016**
Investment in the latest technology and automation of its manufacturing processes. Sagola launches the 4600 Xtreme spray gun

**2020**
Sagola is part of the Elcometer Group

**2022**
Sagola launches the new innovation of the 4100 range spray gun.

# Product Index


**1 Bodyshop • Refinish** 13
page 14 Sprayguns

**2 Industrial Bodyshop** 55
page 56 Sprayguns
page 82 Pressure pot
page 90 Pneumatic Pumps

**3 Application guides & accessories** 99
page 100 Bodyshop sprayguns application guides
page 104 Sprayguns accessories

**4 Airbrush and Touch-Up's** 111
page 112 XTech Airbrushes
page 114 Compressors
page 120 Ancillaries

**5 Crompressed air filtering** 123
page 124 Introduction
page 126 5000 X Series filters
page 144 Pack 6000 X Air Heater
page 146 Serie 4000 Series filters
page 154 Serie Plus Series filters

**6 Compressed air - Complements** 161
page 162 Compressed air hoses
page 164 Quick couplings and connectors

**7 Various Applications** 169
page 170 Sealant guns
page 174 Pneumatic undercoating guns

**8 Spraygun Washers** 179
page 180 Washers
page 185 Accessories

**9 Infra-red** 187
page 188 Dry Tech infra-red
page 194 Venturi drying guns

**10 Personal protection** 197
page 198 Anti-static coverall
page 199 Breathing masks

**11 Accessories and complements** 203
page 204 Sanders and polisher
page 206 Racks. Waste management system (Crushers)
page 208 DPC™ cups. Consumables

# Worldwide Support

**NETHERLANDS**
Elcometer B.V.
+31 (0)30 259 1818
nl_info@elcometer.com
www.elcometer.nl

**ENGLAND, UK**
Elcometer Limited
+44 (0)161 371 6000
sales@elcometer.com
www.elcometer.com

**FRANCE**
Elcometer Sarl
+33 (0)2 38 86 33 44
fr_info@elcometer.com
www.elcometer.fr

**SPAIN**
Sagola S.A.U.
+34 945 214 150
sagola@sagola.com
www.sagola.com

**GERMANY**
Elcometer Instruments GmbH
AALEN: +49 (0) 7361 52806 0
LEER: +49 (0) 7361 528 06 60
de_info@elcometer.com
www.elcometer.de

**UNITED ARAB EMIRATES**
EL Inspection & Blasting Equipment LLC
+971 4 295 0191
+971 4 280 3526
uae_sales@elcometer.com
www.elcometer.ae

*After the incorporation of Sagola to the Elcometer group, its international network of own offices has been increased in a very significant way. Due to this new international network of offices worldwide, the acquisition of all the products manufactured by Sagola for the different business sectors is now much easier. However, Sagola has distributors in more than 80 countries.*

**JAPAN**
Elcometer KK
+81 (0)3 6869 0770
jp_info@elcometer.com
www.elcometer.co.jp

**UNITED STATES OF AMERICA**
Elcometer Inc
WARREN, MI: +1 248 650 0500
HOUSTON, TX: +1 713 450 0631
Toll Free: 800 521 0635
inc@elcometer.com
www.elcometer.com

**MEXICAN REPUBLIC**
Sauritech SA de CV
+52 442 388 5099
ventas@sagolamexico.com.mx
www.sagolamexico.com.mx

**REPUBLIC OF SINGAPORE**
Elcometer (Asia) Pte Ltd
+65 6462 2822
asia@elcometer.com
www.elcometer.com

# We are **here to help...**

sagola@sagola.com
**www.sagola.com**

# 1

# Bodyshop Refinish

**The maximum technological expression in finishing spray guns for bodyshop refinish.**

**The widest range of solutions for the new WATER and HS paints.**

**Homologations from the main automotive paint manufacturers.**

**Ease of application in the most demanding processes. Metallic, pearls, silvers, high-gloss.**

**The widest range of answers for all types of professional, from the most demanding bodyshop production performance to the smallest workshop, including bodyshop coatings for industrial vehicles.**

# Our hallmarks

## Aircaps made of duralumin

DVR CLEAR | DVR AQUA | DVR HVLP | DVR titania PRO

**15% LIGHTER THAN BRASS AIRCAP**

**40% MORE RESISTANT**

*If after **67 years of history**, the **SAGOLA brand** has a very outstanding value in the market, it is thanks to the demand it has shown regarding quality.*

## -Metal to Metal- Technology

**NO PLASTIC DIFFUSERS**

**NO JOINTS**

**NO PLASTIC INSERTS IN THE NOZZLE**

**XTREMELY EASY TO CLEAN**

**XTREMELY EASY TO MAINTAIN**

## Robust and reliable

**ONLY 4 WEARING PIECES**

1 AIRCAP

2 NEEDLE

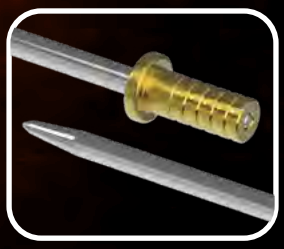

3 NOZZLE

4 PACKING GLAND

# 4600 Xtreme

**High engineering to minimize the number of parts that make up the gun, to eliminate everything that is not metallic from the product area. To make it STRONGER.**

**Sagola DVR suction technology to make it the FASTEST spray gun on the market.**

# Faster, stronger and more efficient

**Sagola EPA high transfer aircaps to reduce workshop costs, to reduce emissions, to make it MORE EFFICIENT.**

| TECHNICAL DATA | | 4600 XTREME |
|---|---|---|
| Weight with cup: (digital version) | 706 grams | 1.56 lbs |
| Weight without cup: (digital version) | 518 grams | 1.14 lbs |
| Weight with cup: (standard version) | 670 grams | 1.48 lbs |
| Weight without cup: (standard version) | 485.5 grams | 1.07 lbs |
| Dimensions without cup (digital) | 16.2 x 2.3 x 17.8 cm. | 6.37 x 0.9 x 7.01 “ |
| Dimensions with cup (standard) | 16.2 x 1.9 x 18.7 cm. | 6.37 x 0.75 x 7.37 “ |
| Air inlet connection | BSP 1/4” Male | |
| Cup | 650 ml. capacity (22 fl oz.)<br>Cup with anti-drip system | |
| Product filter | Includes 80-mesh product filters | |
| Recommended working pressure | 2 bar | 29 psi |
| Average sound pressure level | 80 dB | |
| Battery type (digital version) | CR-1/3N Li-Mn 3 V | |
| Materials in contact with the product | Anodized aluminum, POM, Stainless steel, Teflon and Nylon | |

## DVR suction technology

No other spray gun on the market is able to spray as much paint per minute.

The combination of **fluid nozzles** and **DVR aircaps** is the result of years of experience and technological development. Application speed and covering power never seen before in the Refinish industry.

A before and after in the bodyworks of the whole world.

### 20% faster

**DVR AQUA** (Nozzle 1.3 mm.)

Application speed:
215 g/min* (7.6 oz/min)

**20% faster** than the average NON-HVLP spray gun on the market.

### 15% faster

**DVR CLEAR** (Nozzle 1.3 mm.)

Application speed:
205 g/min* (7.2 oz/min)

**15% faster** than the average NON-HVLP spray gun on the market.

### 19% faster

**DVR HVLP** (Nozzle 1.3 mm.)

Application speed:
188 g/min* (6.6 oz/min)

**19% faster** than the average HVLP spray gun on the market.

### 24% faster

**DVR TITANIA** *PRO* (Nozzle 1.3 mm.)

Application speed:
222 g/min* (7.8 oz/min)

**24% faster** than the average NON-HVLP spray gun on the market.

* Product output flow calculated using a paint with a viscosity of 20" F4 and and a dynamic pressure of 2.0 bar.

## Sagola EPA Aircaps

4600 Xtreme spraygun EPA aircaps have demonstrated **up to 8,5% more transfer efficiency*** than some of the most popular competitive HVLP aircaps in the refinish industry.

### What does 8.5% more transfer efficiency mean for a mid-size body shop?

- **SAVINGS** OF **9 LITRES** PER YEAR OF PRIMERS.
- **SAVINGS** OF **14 LITRES** PER YEAR OF BASECOATS.
- **SAVINGS** OF **20 LITRES** PER YEAR OF CLEARCOATS.
- **REDUCTION** OF **19,200 GRAMS** PER YEAR IN EMISSIONS OF TOXIC COMPONENTS FOR THE ENVIRONMENT.

Fraunhofer IPA

* Transfer data certified by the Fraunhofer Ipa Independent Research Institute according to standard 1151 of the SCAQMD (South Coast Air Quality Management District)

# 4600 Xtreme

## 4600 Xtreme spraygun main news

**01 NOZZLES DV**. Made of stainless steel. Maximum application speed. **Up to 24%** more than the competition.

**02 AIRCAPS** Made of duralumin. Highly resistant and light. **HVLP and EPA systems**.
Totally interchangeable. 4 aircaps to choose. Each compatible with all available fluid nozzle sizes.
High transfer **HVLP Aircap**. Designed under the highest environmental standards. Without pressure reducers in the body of the gun. We convert from a conventional system to an HVLP system, only changing the aircap.
Three high transfer **EPA aircaps**. More versatile, with lower air consumption than HVLP and higher transfer rates according to studies carried out by independent entities.

**03 "SOFT FLOW" AIR VALVE**.
Smooth trigger even at high air pressure levels.
No pressure drops between the 1st and 2nd stage of the trigger. Save paint by regulating air pressure with the trigger partially pulled (1st stage).
Pat. 08380132.4

*Trigger Stage 1* *Trigger Stage 2*

**04 ANODIZED FORGED ALUMINUM BODY**
High strength. Register DC 3 300.029

**05 PRODUCT REGULATOR WITH FLOATING RING**.
For precise regulation of product flow.

**06 Includes IDENTIFYING RINGS of colours**.

**07 METAL TO METAL TECHNOLOGY**. Product zone free of plastic diffusers, gaskets or inserts in the fluid nozzle.
Extremely easy to maintain and clean.

**08 AUTOMATIC PRODUCT PACKING GLAND**
One single piece. It facilitates its disassembly avoiding the breakage of the glands. Unique in the market. Patented system Pat. 073000321.5.

**09 TRIGGUER**.
Comfortable and ergonomic.
100% stainless steel.

**10 DIGITAL MANOMETER VERSION**. Integrated in the gun body, protected from contact with cleaning solvents. Standard battery 3V CR1/3N easily exchangeable by the user.

**Ergonomic regulation** thanks to the position of the regulator in the air inlet of the gun.

Same recommended air pressure in Digital and Standard versions.

• The **Digital version** incorporates an exclusive air valve design that allows the same pressure regulation to be used in both the standard and digital versions.

# 4600 Xtreme

## IDENTIFYING RINGS OF COLOURS

**Code** 56418635



## AIR FLOW REGULATOR

The **RC1 pressure regulator** is the perfect ally for the Non-digital version. Hand tighten, no wrench needed. Perfect closing.
No teflon need in gun's air inlet.

**Code** 56418020. (see page 105)

# 4600 Xtreme

## DVR aircaps technical data / Versions

**DVR AQUA Aircap.** Precision and control at 215 g/min. High level of atomization at low pressures. Sagola EPA high transfer system.

| Recommended application | Recommended nozzle | Product output flow | Fan size | Application distance |
|---|---|---|---|---|
| WATERBORNE BASECOAT | 1.20 | 191 g/min. (6.7 oz/min.) | 290 mm. (11.4”) | 18 - 20 cm. (7 - 7.9”) |
| | 1.20 XL | 207 g/min. (7.3 oz/min.) | 300 mm. (11.8”) | |
| SOLVENT BASECOAT | 1.30 | 215 g/min. (7.6 oz/min.) | 310 mm. (12.2”) | |
| | 1.30 XL | 227 g/min. (8 oz/min.) | 315 mm. (12.4”) | |

**Air consumption at 2 bar (29 psi): 280 L/min. (9.88 cfm)**

**Recommended pressure: 1.8 - 2.0 bar (26.1 - 29 psi)**

| Code Digital v.* | Code Standard v. |
|---|---|
| 10142221 | 10142201 |
| 10142234 | 10142215 |
| 10142223 | 10142203 |
| 10142228 | 10142208 |

* Digital manometer in BAR. Consult digital pressure gauge codes in PSI.

**DVR HVLP Aircap.** HVLP technology serving colour. Large fan size to reduce application distance and thus increase transfer. Sagola HVLP high transfer system.

| Recommended application | Recommended nozzle | Product output flow | Fan size | Application distance |
|---|---|---|---|---|
| WATERBORNE BASECOAT | 1.20 | 170 g/min. (6 oz/min.) | 290 mm. (11.4”) | 18 - 20 cm. (7 - 7.9”) |
| | 1.20 XL | 179 g/min. (6.3 oz/min.) | 305 mm. (12”) | |
| SOLVENT BASECOAT | 1.30 | 188 g/min. (6.6 oz/min.) | 315 mm. (12.4”) | |
| | 1.30 XL | 198 g/min. (7 oz/min.) | 325 mm. (12.8”) | |

**Air consumption at 2 bar (29 psi): 450 L/min. (15.89 cfm)**

**Recommended pressure: 2 bar (29 psi)**

| Code Digital v.* | Code Standard v. |
|---|---|
| 10142239 | 10142219 |
| 10142269 | 10142220 |
| 10142225 | 10142205 |
| 10142238 | 10142209 |

* Digital manometer in BAR. Consult digital pressure gauge codes in PSI.

# 4600 Xtreme

## DVR aircaps technical data / Versions

**DVR CLEAR Aircap.** Maximum atomization energy to work with high solid content clearcoats. OEM finishes. Maximum application speed. Sagola EPA high transfer system.

| Recommended application | Recommended nozzle | Product output flow | Fan size | Application distance |
|---|---|---|---|---|
| CLEARCOATS LOW VISCOSITY EXPRESS DRYING | 1.20 | 185 g/min. (6.5 oz/min.) | 275 mm. (10.8”) | 18 - 20 cm. (7 - 7.9”) |
| | 1.20 XL | 197 g/min. (7 oz/min.) | 285 mm. (11.2”) | |
| HS-UHS CLEARCOATS | 1.30 | 205 g/min. (7.2 oz/min.) | 290 mm. (11.4”) | |
| SINGLE STAGE | 1.30 XL | 219 g/min. (7.7 oz/min.) | 295 mm. (11.6”) | |

**Air consumption at 2 bar (29 psi): 295 L/min. (10.42 cfm)**

**Recommended pressure: 2.2 bar (31.9 psi)**

| Code Digital v.* | Code Standard v. |
|---|---|
| 10142237 | 10142218 |
| 10142235 | 10142216 |
| 10142224 | 10142204 |
| 10142226 | 10142206 |

* Digital manometer in BAR. Consult digital pressure gauge codes in PSI.

**DVR TITANIA PRO Aircap.** Low Overspray. Specially designed to work with fast drying clearcoats. MIRROR finishes. Control, large fan size and fine atomization. Sagola EPA high transfer system.

| Recommended application | Recommended nozzle | Product output flow | Fan size | Application distance |
|---|---|---|---|---|
| CLEARCOATS LOW VISCOSITY EXPRESS DRYING | 1.20 | 196 g/min. (6.9 oz/min.) | 285 mm. (10.8”) | 18 - 20 cm. (7 - 7.9”) |
| | 1.20 XL | 203 g/min. (7.1 oz/min.) | 290 mm. (11.2”) | |
| HS-UHS CLEARCOATS | 1.30 | 222 g/min. (7 oz/min.) | 305 mm. (11.4”) | |
| SINGLE STAGE | 1.30 XL | 229 g/min. (8.1 oz/min.) | 310 mm. (11.6”) | |

**Air consumption at 2 bar (29 psi): 315 L/min. (11.12 cfm)**

**Recommended pressure: 2.2 bar (31.9 psi)**

| Code Digital v.* | Code Standard v. |
|---|---|
| 10142236 | 10142217 |
| 10142233 | 10142214 |
| 10142222 | 10142202 |
| 10142227 | 10142207 |

* Digital manometer in BAR. Consult digital pressure gauge codes in PSI.

***Approved for use by leading paint brands. Visit www.sagola.com to download our Paint Application Guides.***

# 4600 Xtreme

## Sagola 4600 Xtreme Spare parts

The Sagola 4600 Xtreme is covered by a **3-year** manufacturers warranty from SAGOLA.
Please follow the recommended housekeeping and maintenance procedure as prescribed in the operation manuals.

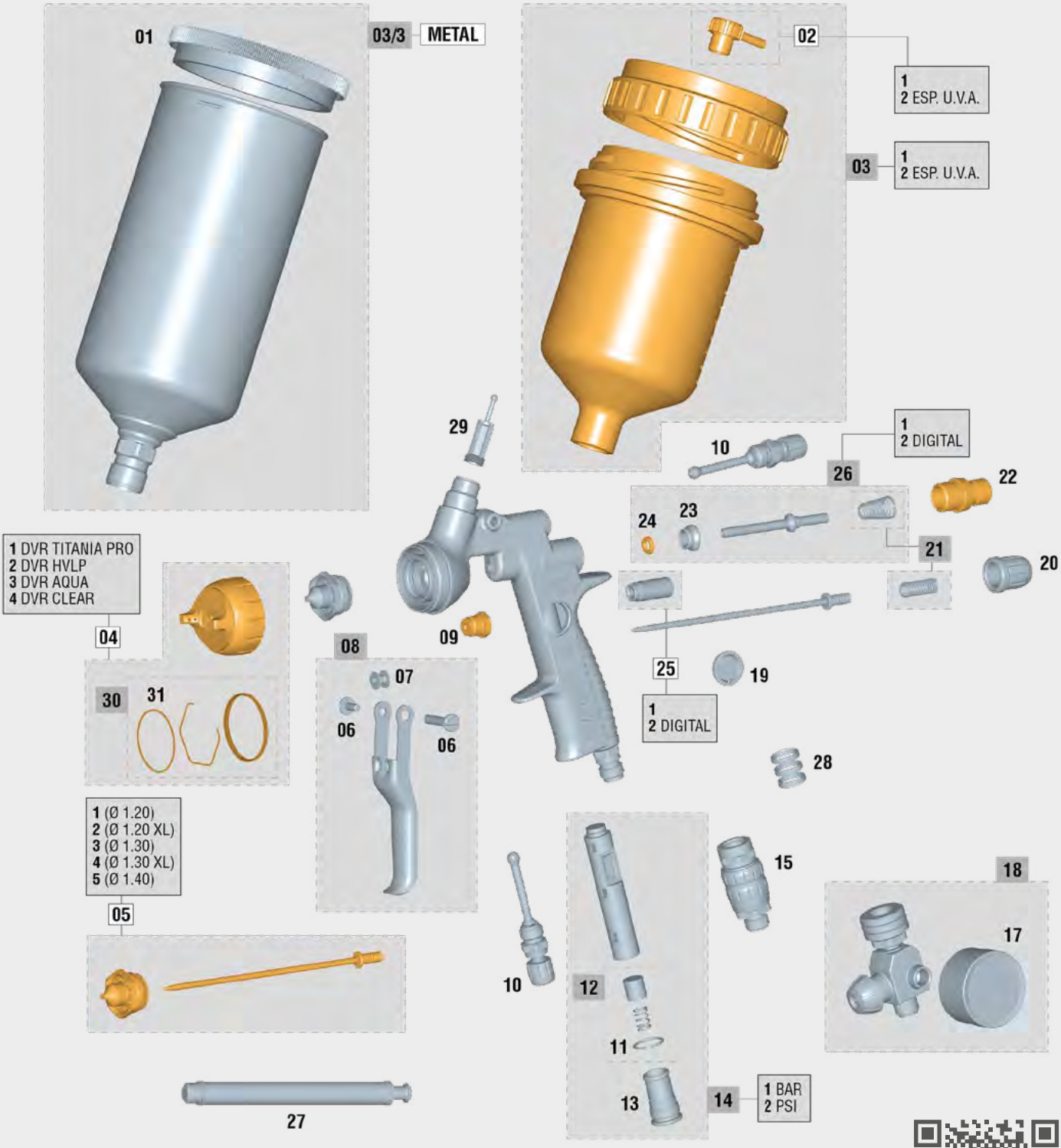


*Last updated version of the exploded view*

# 4600 Xtreme

We call critical parts those that can stop the work of a spraygun: wear parts, gaskets, packings,... Sagola sprayguns design offers **ONLY 6 CRITICAL PARTS ( )**. Only 6 references in store to provide a 100% effective after-sales service.

## SPARE PARTS — 4600 XTREME

| No. | Code | Description |
|---|---|---|
| 01 | 57111513 | Gravity tank top cover 1.00 L (plastic) |
| 02/1 | 55712157 | Connection plug dripless |
| 02/2 | 55712170 | Connection plug dripless flat (U.V.A.) |
| **03/1** | **56418432** | **Gravity cup 0.65 L** |
| 03/2 | 56418433 | Gravity cup 0.65 L (U.V.A.) |
| 03/3 | 56418505 | Aluminium Gravity cup 1.00 L |
| **04/1** | **56418627** | **Aircap DVR Titania** |
| **04/2** | **56418628** | **Aircap DVR HVLP** |
| **04/3** | **56418629** | **Aircap DVR Aqua** |
| **04/4** | **56418630** | **Aircap DVR Clear** |
| **05/1** | **10011137** | **Kit nozzle + needle 1.20 Serie 46** |
| **05/2** | **10011145** | **Kit nozzle + needle 1.20 XL Serie 46** |
| **05/3** | **10011138** | **Kit nozzle + needle 1.30 Serie 46** |
| **05/4** | **10011139** | **Kit nozzle + needle 1.30 XL Serie 46** |
| **05/5** | **10011140** | **Kit nozzle + needle 1.40 Serie 46** |
| 06 | 56418631 | Kit screw + trigger shaft |
| 07 | 51910607 | Bushing |
| 08 | 56418632 | Trigger kit |
| **09** | **56411616** | **Complete packing nut Kit** |
| 10 | 56415258 | Fan Regulator |
| 11 | 54250985 | O-ring 17 x 1 |
| 12 | 56418440 | Battery replacement Kit (digital version) |

## SPARE PARTS — 4600 XTREME

| No. | Code | Description |
|---|---|---|
| 13 | 55710004 | Battery door connection (digital version) |
| 14/1 | 56418442 | Digital gauge Kit (Scale BAR) |
| 14/2 | 56418559 | Digital gauge Kit (Scale PSI) |
| 15 | 56418012 | Air flow Regulator 1/4” x19 M-F |
| 17 | 54550009 | Gauge 10 1/8” Centered position |
| 18 | 56418020 | RC1 Air flow regulator with gauge |
| 19 | 56410065 | Gauge viewfinder digital reading |
| 20 | 56415121 | Product Regulator wheel |
| 21 | 56418633 | Spring Kit |
| **22** | **56411623** | **Product needle guide box** |
| 23 | 54110012 | Air valve seating |
| **24** | **56418441** | **air valve washer (6 units)** |
| 25/1 | 57212205 | Packing screw |
| 25/2 | 57212223 | Packing screw (digital version) |
| 26/1 | 56418634 | Air valve Kit |
| 26/2 | 56418636 | Air valve Kit (digital version) |
| 27 | 50210214 | Air valve assembly key |
| 28 | 56418635 | Identification rings kit |
| 29 | 56418438 | Product filters (10 units) |
| 30 | 56418677 | Gasket nozzle Kit |
| 31 | 56418681 | Gasket washer (5 units) |

***This exploded view is not the material list of the spraygun***

***Clean the spraygun correctly. No metal tools. Only brushes. Lubricate the moving parts of the gun after each cleaning.***

**Cleaning kit** Brush and sticks for optimum cleaning outside and inside the gun.

**Code** 40000086

**Lubricant grease** Natural grease. High consistency, even under extreme temperatures. Long lasting, it doesn’t lose properties over the time. 100 ml. can.

**Code** 56418589

(see page 105)

# Altair Led

**Highly efficient 4500 Kelvin led that replicates the sun light. Perfect spray control of metallics, pearls and clear coats.**

### CLIP&GO system

**It is assembled in a CLIP without the need of disassembling any element from the gun.**

# High light intensity led system

### High precision visual control in colours spray

**Visual control of layer coverage and fan pattern overlap, as well as correct orientation of metallic particle or pearl effect avoiding variations of tone due to bad dispersion of particles and/or mottling due to lack or excess of paint supply.**

### Improvement of finish quality

**As in the colour base, a better control of layer dispersion and fan pattern overlap will be achieved avoiding irregular clear coat supply (lack or excess material), gloss irregularities, load irregularity (orange peel).**

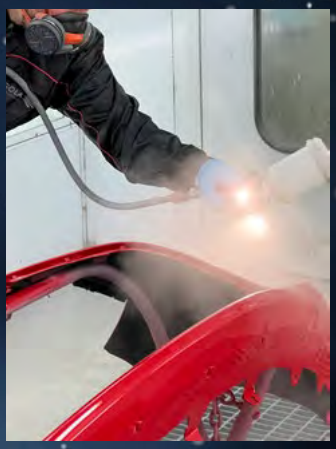

| TECHNICAL DATA | ALTAIR LED | |
|---|---|---|
| Leds (2 units) | 4,500 Kelvin (CRI: 92) | |
| Batteries | Lithium 3.7 V 4.07 Wh AA size | |
| Light scattering | 510 lumens | |
| Batteries life | Level 1: 160 minutes | Level 2: 80 minutes |
| Weight | 118 g. with batteries | 0.26 lbs with batteries |
| Materials | Polyamide, POM, stainless steel and glass | |

## Altair Led Spare parts

The Sagola High light intensity led system is covered by a **3-year** manufacturers warranty from SAGOLA.

Please follow the recommended housekeeping and maintenance procedure as prescribed in the operation manuals.

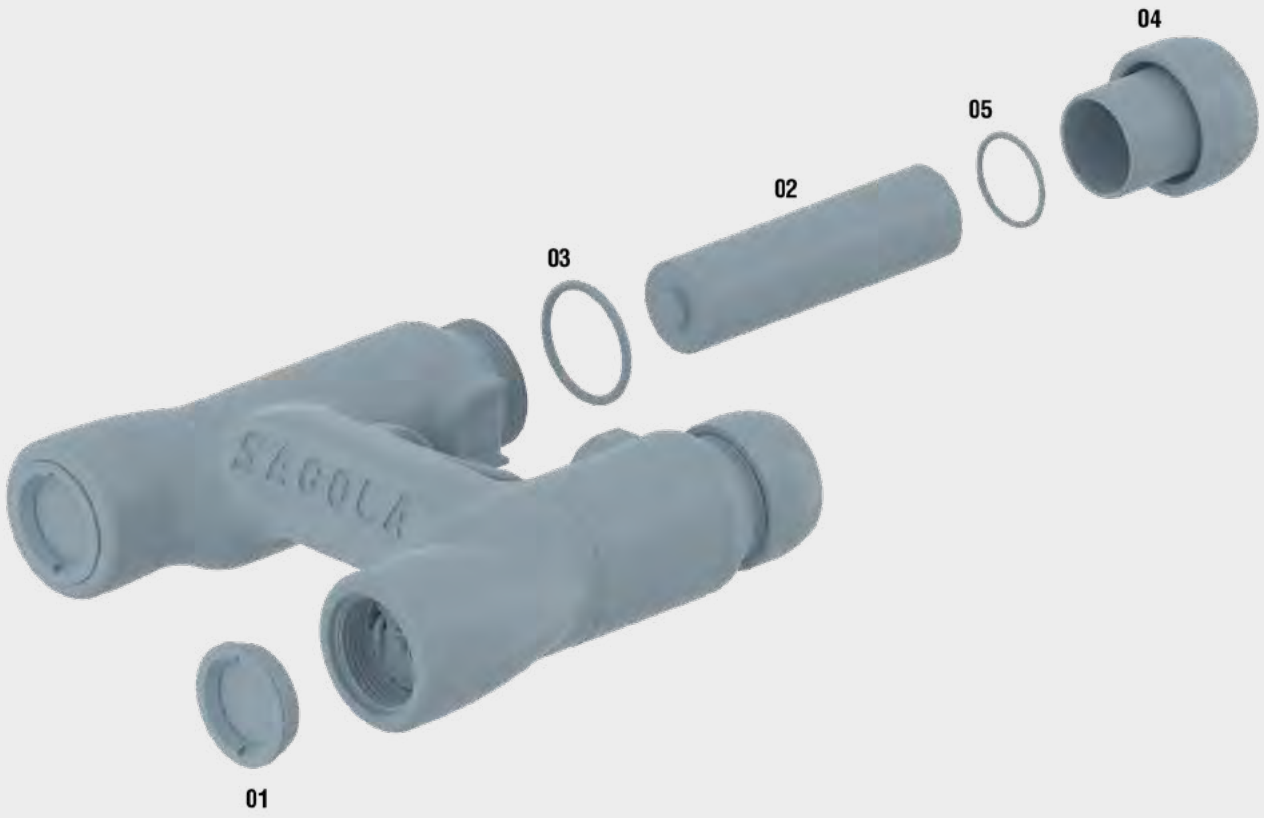


**SPARE PARTS** **ALTAIR LED**

| No. | Code | Description |
|---|---|---|
| 01 | 56410065 | Visor |
| 02 | 52310011 | Batería Litio |
| 03 | 56418739 | Junta tórica |
| 04 | 56417912 | Volante |
| 05 | 56418740 | Junta tótica |

*Last updated version of the exploded view*

*This exploded view is not the material list of the equipment*

# 3300 GTO / GTO CAR

**From a basecoat, to a filler or gun putty. There's nothing better than the 3300 GTO spraygun. Wide variety of aircaps and fluid nozzles from 1.2 mm. up to 2.8 mm.**

**Finishes: 1.3 - 1.4 mm.**
**Primers: 1.6 - 1.8 mm.**
**Gun putties: 2.0 - 2.8 mm.**

**Unreachable technologies for many..., incorporated in our mid-range of sprayguns.**

# Versatility

**HVLP and EPA high transfer Aircaps made of duralumin. Forged aluminum body with 'soft touch' satin finish. No joints or plastic inserts in the product area. One-piece self-adjusting packing gland. Ergonomic trigger made of stainless steel.**

| TECHNICAL DATA | | 3300 GTO |
|---|---|---|
| Weight with cup: (3300 GTO) | 662.4 grams | 1.46 lbs |
| Weight without cup: (3300 GTO) | 474.8 grams | 1.05 lbs |
| Weight with cup: (3300 GTO CAR) | 783 grams | 1.72 lbs |
| Weight without cup: (3300 GTO CAR) | 595 grams | 1.31 lbs |
| Dimensions without cup (3300 GTO) | 18.2 x 1.9 x 17.8 cm. | 7.16 x 0.75 x 7.05 " |
| Dimensions without cup (3300 GTO CAR) | 18.2 x 4.8 x 22 cm. | 7.16 x 1.89 x 8.66 " |
| Air inlet connection | BSP 1/4" Male | |
| Cup | 650 ml. capacity (22 fl oz.)<br>Cup with anti-drop system | |
| Product filter | Includes 80-mesh product filters | |
| Recommended working pressure | 2 bar | 29 psi |
| Average sound pressure level | 80 dB | |
| Materials in contact with the product | Anodized aluminum, chromed aluminum, POM, Stainless steel and Teflon | |

# 3300 GTO / GTO CAR

## 3300 GTO spraygun main news

**01 SUPER LIGHT. -METAL TO METAL- TECHNOLOGY.**
No sealing joints between components.

**02 High strength FORGED ALUMINUM BODY.**
REGISTER DC 924667-0004 DESIGN REGISTER.

**03 NEW ALUMINUM AIRCAPS.**
GTO TECH / GTO HVLP / 3300 EPA / 3300 EVO
Ultra-fine atomization and larger fans. Designed for the best response at any pressure. With mechanized aerodynamic caps which eliminate turbulence and reverse painting.

**04 One single piece AUTOMATIC PAINT PACKING GLAND.**
Unique in the market. It avoids manipulation and breakage of the glands and makes it easier to remove for thorough cleaning of the paint area.

**05 ERGONOMIC TRIGGER.**
Made of stainless steel. It reduces fatigue.

**06 NOZZLE AND NEEDLE.**
Made of stainless steel.

**07 "SOFT FLOW" AIR VALVE.**
Smooth trigger even at high air pressure levels. No pressure drops between the 1st and 2nd stage of the trigger. Save paint by regulating air pressure with the trigger partially pulled (1st stage).

**08 SINGLE SHAFT SYSTEM.**
Directly continuing Xtreme model series with a simplified design, synchronized performance in any kind of situation, fewer parts, and maintenance reduction.

**09 NEW COLOUR IDENTIFIER.**
Perfect for differentiation spray guns when there are multiple painters. (COLOR CODE)

**10 AIR FLOW REGULATOR with PRESSURE GAUGE.** It maintains the working pressure according to the parameters of Emissions regulations. (Green scale). Standard in TECH / HVLP bodyshop versions. GTO CAR Version. Code 40000335

*Approved for use by leading paint brands. Visit www.sagola.com to download our Paint Application Guides.*

# 3300 GTO CAR

**Including air flow regulator with RC2 pressure gauge in the finishing versions.**

**Code** 40000335. (see page 105)

## GTO CAR aircaps technical data / Versions

**GTO TECH Aircap.** Versatility brought to the maximum expression. Suitable for both colour and clearcoat and single stage products. High atomization level. Sagola EPA high transfer system.

| Recommended application | Recommended nozzle | Product output flow | Fan size | Application distance | Code 3300 GTO CAR |
|---|---|---|---|---|---|
| WATERBORNE BASECOAT | 1.30 | 169 g/min. (6 oz/min.) | 305 mm. (12”) | 18 - 20 cm. (7 - 7.9”) | 10141551 |
| CLEARCOAT QUICK DRYING | | | | | |
| SOLVENT BASECOAT | 1.40 | 179 g/min. (6.3 oz/min.) | 315 mm. (12.4”) | | 10141552 |
| UHS CLEARCOAT | | | | | |
| SINGLE STAGE | | | | | |

**Air consumption at 2 bar (29 psi): 285 L/min. (10.06 cfm)**

**Recommended pressure: 1.8 - 2.2 bar (26.1 - 31.9 psi)**

COLOUR
CLEAR

**GTO HVLP Aircap.** Sagola HVLP System. Low aircap pressure to paint closer to the part and increase the transfer rate. Perfect colour uniformity, especially in metallics.

| Recommended application | Recommended nozzle | Product output flow | Fan size | Application distance | Code 3300 GTO CAR |
|---|---|---|---|---|---|
| WATERBORNE BASECOAT | 1.30 | 145 g/min. (5.1 oz/min.) | 245 mm. (9.6”) | 18 - 20 cm. (7 - 7.9”) | 10141554 |
| SOLVENT BASECOAT | 1.40 | 161 g/min. (5.7 oz/min.) | 250 mm. (9.8”) | | 10141558 |

**Air consumption at 2 bar (29 psi): 360 L/min. (12.71 cfm)**

**Recommended pressure: 1.8 - 2.0 bar (26.1 - 29 psi)**

COLOUR

# GTO CAR aircaps technical data / Versions

PRIMERS

**GTO EPA Aircap.** Sagola EPA high transfer system. Specially designed to obtain a smooth and uniform finish. Saving time and consumables in the sanding process.

The reduction of spray mist (overspray), makes it suitable for use outside the booth in preparation areas; also achieving a significant reduction in the consumption of primer and in the emission of toxic components for the environment.

| Recommended application | Recommended nozzle | Product output flow | Fan size | Application distance | Code 3300 GTO |
|---|---|---|---|---|---|
| SANDING PRIMERS | 1.60 | 156 g/min. (5.5 oz/min.) | 225 mm. (8.9”) | 18 - 20 cm. (7 - 7.9”) | 10141563 |
| | 1.80 | 184 g/min. (6.5 oz/min.) | 245 mm. (9.6”) | | 10141564 |

**Air consumption at 2 bar (29 psi): 250 L/min. (8.8 cfm)**

**Recommended pressure: 1.8 - 2.0 bar (26.1 - 29 psi)**

**GTO HVLP Aircap.** Sagola HVLP System. Large fan size. Low aircap pressure to paint closer to the part and increase the transfer rate.

Smooth and uniform finish to save time and consumables in the sanding process. Reduction of spray mist (overspray).

| Recommended application | Recommended nozzle | Product output flow | Fan size | Application distance | Code 3300 GTO |
|---|---|---|---|---|---|
| SANDING PRIMERS | 1.60 | 172 g/min. (6 oz/min.) | 260 mm. (10.2”) | 12 - 15 cm. (4.72 - 5.90”) | 10141556 |
| | 1.80 | 193 g/min. (6.8 oz/min.) | 295 mm. (11.6”) | | 10141557 |

**Air consumption at 2 bar (29 psi): 360 L/min. (12.71 cfm)**

**Recommended pressure: 1.5 - 2.0 bar (21.7 - 29 psi)**

**GTO EVO Aircap.** Sagola EPA high transfer system. Maximum atomization quality to achieve a fine and stretched finish. large fan size.

| Recommended application | Recommended nozzle | Product output flow | Fan size | Application distance | Code 3300 GTO |
|---|---|---|---|---|---|
| PRIMERS WET ON WET | 1.30 | 172 g/min. (6 oz/min.) | 260 mm. (10.2”) | 18 - 20 cm. (7 - 7.9”) | 10141559 |
| | 1.40 | 179 g/min. (6.3 oz/min.) | 280 mm. (11”) | | 10141560 |

**Air consumption at 2 bar (29 psi): 255 L/min. (9.01 cfm)**

**Recommended pressure: 1.8 - 2.0 bar (26.1 - 29 psi)**

**GTO 64S/62S Aircaps.** Maximum product output flow and atomization power for the application of putties on large surfaces. Smooth and uniform finish. Saving time and consumables in the sanding process.

| Recommended application | Recommended nozzle | Product output flow | Fan size | Application distance | Code 3300 GTO |
|---|---|---|---|---|---|
| GUN FILLERS | 2.20 **64S** | 300 g/min. (10.6 oz/min.) | 300 mm. (11.8”) | 18 - 20 cm. (7 - 7.9”) | 10141572 |
| | 2.80 **62S** | 397 g/min. (14 oz/min.) | 250 mm. (9.8”) | | 10141574 |

**Air consumption at 2 bar (29 psi) 64S: 310 L/min. (10.9 cfm)**
**Air consumption at 2 bar (29 psi) 62S: 270 L/min. (9.5 cfm)**

**Recommended pressure: 2.0 - 2.5 bar (29 - 36.2 psi)**

# 3300 GTO CAR / 3300 GTO

## 3300 GTO Spare parts

The Sagola 3300 GTO CAR / 3300 GTO is covered by a **3-year** manufacturers warranty from SAGOLA.
Please follow the recommended housekeeping and maintenance procedure as prescribed in the operation manuals.

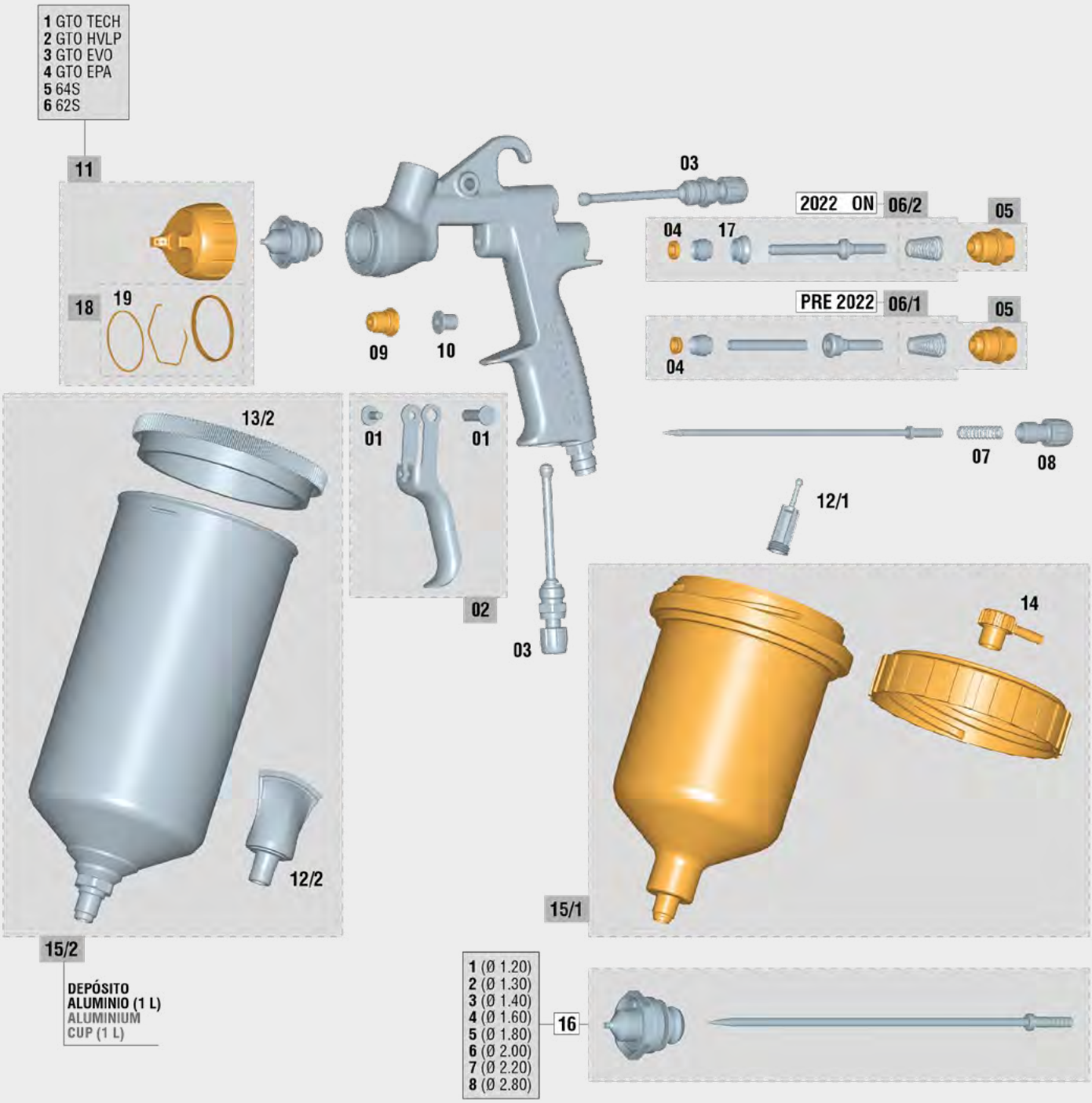


*Last updated version of the exploded view*

# 3300 GTO CAR / 3300 GTO

We call critical parts those that can stop the work of a spraygun: wear parts, gaskets, packings,... Sagola sprayguns design offers **ONLY 6 CRITICAL PARTS ( )**. Only 6 references in store to provide a 100% effective after-sales service.

## SPARE PARTS — 3300 GTO

| No. | Code | Description |
|---|---|---|
| 01 | 56418429 | Kit screw + trigger shaft (short) |
| 02 | 56418637 | Trigger Kit |
| 03 | 56415254 | Air flow / fan regulator |
| **04** | **56418494** | **Air valve washer (6 units)** |
| 05 | 56418701 | Product needle guide box + spring |
| 06/1 | 56418664 | Air valve Kit PRE 2022 |
| 06/2 | 56418669 | Air valve Kit 2022 ON |
| 07 | 56410072 | Spring + stop |
| 08 | 57810342 | Product regulator wheel (black) |
| **09** | **57212211** | **Complete packing nut Kit** |
| 10 | 51910608 | Bushing |
| **11/1** | **56418551** | **Aircap GTO TECH** |
| **11/2** | **56418552** | **Aircap GTO HVLP** |
| **11/3** | **56418558** | **Aircap GTO EVO** |
| **11/4** | **56418645** | **Aircap 3300 EPA** |
| **11/5** | **56418646** | **Aircap 64S** |
| **11/6** | **56418647** | **Aircap 62S** |

## SPARE PARTS — 3300 GTO

| No. | Code | Description |
|---|---|---|
| 12/1 | 56418438 | Product filter (10 units) |
| 12/2 | 56418003 | Product filter 1L metallic cup (10 units) |
| 13/1 | 57111508 | Gravity cup top cover 0.65 L |
| 13/2 | 57111513 | Gravity cup top cover 1.00 L (plastic) |
| 14 | 55712157 | Connection plug dripless |
| **15/1** | **56418085** | **Gravity cup 0.65 L** |
| 15/2 | 56418082 | Aluminium cup 1 L |
| **16/1** | **10011180** | **Kit nozzle + needle 1.20 Serie 3300 Pro** |
| **16/2** | **10011191** | **Kit nozzle + needle 1.30 Serie 3300 Pro** |
| **16/3** | **10011181** | **Kit nozzle + needle 1.40 Serie 3300 Pro** |
| **16/4** | **10011182** | **Kit nozzle + needle 1.60 Serie 3300 Pro** |
| **16/5** | **10011183** | **Kit nozzle + needle 1.80 Serie 3300 Pro** |
| **16/6** | **10011188** | **Kit nozzle + needle 2.00 Serie 3300 Pro** |
| **16/7** | **10011192** | **Kit nozzle + needle 2.20 Serie 3300 Pro** |
| **16/8** | **10011190** | **Kit nozzle + needle 2.80 Serie 3300 Pro** |
| 17 | 54110012 | Air valve seating |
| 18 | 56418679 | Gasket nozzle Kit |
| 19 | 56418682 | Gasket washer (5 units) |

***This exploded view is not the material list of the spraygun***

***Clean the spraygun correctly. No metal tools. Only brushes. Lubricate the moving parts of the gun after each cleaning.***

**Cleaning kit** Brush and sticks for optimum cleaning outside and inside the gun.

**Code** 40000086

**Lubricant grease** Natural grease. High consistency, even under extreme temperatures. Long lasting, it doesn't lose properties over the time. 100 ml. can.

**Code** 56418589

(see page 105)

# Mini Xtreme

**Spot Repair**

**All of our Xreme identity in 365 grams: metal-to-metal technology, aircaps made of duralumin, forged and anodized body...**

**Ideal for parts painting**

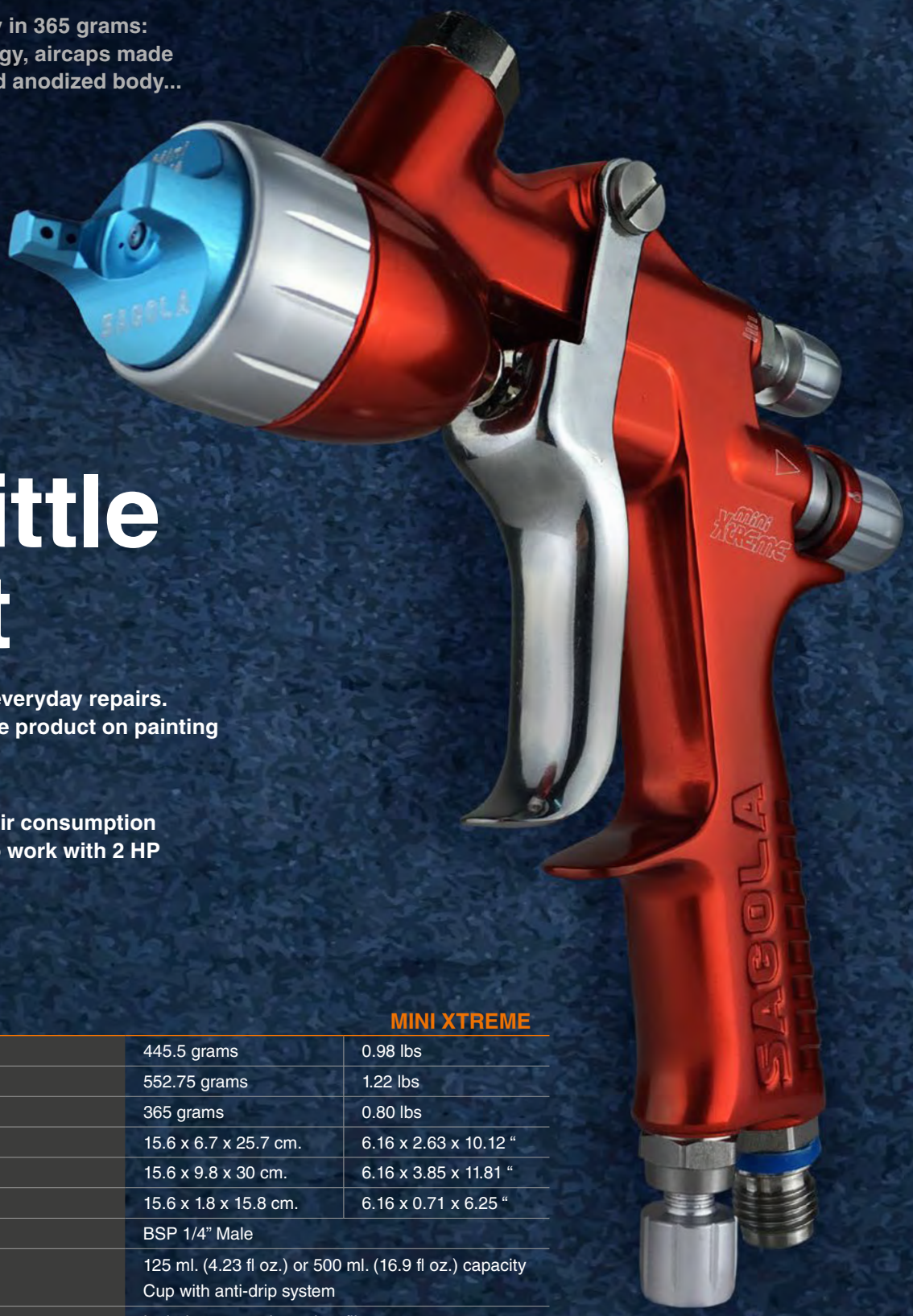


# The little beast

**The best tool for quick everyday repairs. Adjusted fan size to save product on painting small parts.**

**Fans of 30 cm. with an air consumption of 190 L/min. Suitable to work with 2 HP compressors.**

| TECHNICAL DATA | | MINI XTREME |
|---|---|---|
| Weight with cup 125 ml. | 445.5 grams | 0.98 lbs |
| Weight with cup 500 ml. | 552.75 grams | 1.22 lbs |
| Weight without cup | 365 grams | 0.80 lbs |
| Dimensions with cup 125 ml. | 15.6 x 6.7 x 25.7 cm. | 6.16 x 2.63 x 10.12 “ |
| Dimensions with cup 500 ml. | 15.6 x 9.8 x 30 cm. | 6.16 x 3.85 x 11.81 “ |
| Dimensions without cup | 15.6 x 1.8 x 15.8 cm. | 6.16 x 0.71 x 6.25 “ |
| Air inlet connection | BSP 1/4” Male | |
| Cup | 125 ml. (4.23 fl oz.) or 500 ml. (16.9 fl oz.) capacity<br>Cup with anti-drip system | |
| Product filter | Includes 80-mesh product filters | |
| Recommended working pressure | 2 bar | 29 psi |
| Average sound pressure level | 80 dB | |
| Materials in contact with the product | Anodized aluminum, chromed aluminum, POM, Stainless steel and Teflon | |

# Mini Xtreme

## Spraygun main news

**01 NOZZLES**. Made of stainless steel.
Maximum application speed.

**02 AIRCAPS**. Made of duralumin. Highly resistant and light. EPA and HVLP Systems. Totally interchangeable. 4 aircaps to choose. Each compatible with all available fluid nozzle sizes. High transfer HVLP aircap. Designed under the highest environmental standards. Without pressure reducers in the body of the gun We convert from a conventional system to an HVLP system, only changing the aircap. Two high transfer EPA aircaps.

**03 "SOFT FLOW" AIR VALVE**.
Smooth trigger even at high air pressure levels.
No pressure drops between the 1st and 2nd stage of the trigger. Save paint by regulating air pressure with the trigger partially pulled (1st stage).

**04 PRODUCT REGULATOR with FLOATING RING**. For precise regulation of product flow.

**05 IDENTIFYING RINGS OF COLOURS**. (COLOR CODE).
Perfect for differentiation of spray guns when there are multiple painters.

**06 ANODIZED FORGED ALUMINUM BODY**
**High strength in just 365 grams**

**07 "METAL TO METAL" TECHNOLOGY**. Product zone free of plastic diffusers, gaskets or inserts in the fluid nozzle. Extremely easy to maintain and clean.

**08 One single piece AUTOMATIC PRODUCT PACKING GLAND**.
Made of stainless steel. It avoids manipulation and breakage of the glands and makes easier to remove it for a through cleaning of the paint part.

**09 AIR FLOW REGULATOR with GAUGE**.
The RC1 pressure regulator is the perfect ally for the Non-digital version. Hand tighten, no wrench needed. Perfect closing. Without Teflon coating the air inlet of the gun.

**10 SPECIAL MINI TECH JET ROUND AIRCAP**.
Convert your Mini Xtreme to an airbrush.
Specially designed for low-viscosity products, lettering and small retouches.

**11 CUP OPTIONS**. (See page106)
- 125 ml. white cup
- 125 ml. black cup for UV products
- 500 ml. white cup
- 650 ml. white cup

***Approved for use by leading paint brands. Visit www.sagola.com to download our Paint Application Guides.***

# Mini Xtreme

## Mini Xtreme aircaps technical data / Versions

**MINI EPA Aircap.** High speed of application in low viscosity products. Suitable for any type of clearcoat. High level of atomization. Sagola EPA high transfer system.

| Recommended application | Recommended nozzle | Product output flow | Fan size | Application distance | Code Mini Xtreme |
|---|---|---|---|---|---|
| SOLVENT BASECOAT<br>"SMART REPAIR" | 0.80 | 49 g/min. (1.7 oz/min.) | 110 mm. (4.33") | 18 - 20 cm. (7 - 7.9") | 10111806* |
| CLEARCOAT QUICK DRYING<br>HS CLEARCOATS<br>"SMART REPAIR" | 1.00 | 97 g/min. (3.4 oz/min.) | 195 mm. (7.68") | | 10111807* |
| UHS CLEARCOATS<br>"SPOT REPAIR" | 1.20 | 162 g/min. (5.7 oz/min.) | 260 mm. (10.24") | | 10111808* |

**Air consumption at 2 bar (29 psi): 190 L/min. (6.71 cfm)**

**Recommended pressure: 1.0 - 2.0 bar (14.5 - 29 psi)**

* 500 ml. cup

**MINI TECH Aircap.** Ideal for quick drying clearcoats. Low viscosity products. Lettering and small retouches.

| Recommended application | Recommended nozzle | Product output flow | Fan size | Application distance | Code Mini Xtreme |
|---|---|---|---|---|---|
| PRIMERS<br>"SMART REPAIR" | 0.60 | 96 g/min. (3.4 oz/min.) | 50 mm. (1.96") | 18 - 20 cm. (7 - 7.9") | 10111811 |
| PRIMERS<br>"SMART REPAIR" | 1.00 | 123 g/min. (4.3 oz/min.) | 195 mm. (7.68") | | 10111812 |

**Air consumption at 2 bar (29 psi): 52 L/min. (1.84 cfm)**

**Recommended pressure: 0.5 - 1.0 bar (7.2 - 14.5 psi)**

500 ml. cup

## Different cups supplied

Three types of cups. (see page 106)

| Description | Code |
|---|---|
| Gravity cup 125 ml. | 56418081 |
| Gravity cup 125 ml. black | 56418099 |
| Gravity cup 500 ml. | 56418080 |
| Cup couplings 125 ml. (includes) | 55711507 |

# Mini Xtreme aircaps technical data / Versions

**MINI AQUA Aircap.** Special for waterborne product applications. Uniformity in colour application. Sagola EPA high transfer system.

| Recommended application | Recommended nozzle | Product output flow | Fan size | Application distance | Code Mini Xtreme |
|---|---|---|---|---|---|
| SOLVENT BASECOAT<br>"SMART REPAIR" | 0.80 | 49 g/min. (1.7 oz/min.) | 110 mm. (4.33") | 18 - 20 cm. (7 - 7.9") | 10111801 |
| SOLVENT BASECOAT<br>WATERBORNE<br>"SMART REPAIR" | 1.00 | 97 g/min. (3.4 oz/min.) | 195 mm. (7.68") | | 10111802 |
| **Air consumption at 2 bar (29 psi): 190 L/min. (6.71 cfm)** | | | **Recommended pressure: 1.0 - 2.0 bar (14.5 - 29 psi)** | | 125 ml. cup |

Mini Xtreme spraygun with Mini AQUA aircap and 1.20 nozzle, **especially** for **UV light** contact drying product applications.

| Recommended application | Recommended nozzle | Product output flow | Fan size | Application distance | Code Mini Xtreme |
|---|---|---|---|---|---|
| WATERBORNE AND SOLVENT BASECOAT<br>U.V. PRIMER<br>"SPOT REPAIR" | 1.20 | 162 g/min. (5.7 oz/min.) | 260 mm. (10.24") | 18 - 20 cm. (7 - 7.9") | 10111803 |
| **Air consumption at 2 bar (29 psi): 190 L/min. (6.71 cfm)** | | | **Recommended pressure: 1.0 - 2.0 bar (14.5 - 29 psi)** | | 125 ml. **Black** cup |

**MINI HVLP Aircap.** Uniformity in colour application. deal for waterborne products and quick-drying paints (HS). Sagola HVLP high transfer system.

| Recommended application | Recommended nozzle | Product output flow | Fan size | Application distance | Code Mini Xtreme |
|---|---|---|---|---|---|
| PRIMERS<br>"SMART REPAIR" | 1.00 | 80 g/min. (1.7 oz/min.) | 155 mm. (6.1") | 18 - 20 cm. (7 - 7.9") | 10111809 |
| PRIMERS<br>"SPOT REPAIR" | 1.20 | 123 g/min. (3.4 oz/min.) | 195 mm. (7.68") | | 10111810 |
| PRIMERS<br>"SPOT REPAIR" | 1.30 | 133 g/min. (5.7 oz/min.) | 215 mm. (8.46") | | 10111804* |
| **Air consumption at 2 bar (29 psi): 325 L/min. (11.48 cfm)** | | | **Recommended pressure: 1.0 - 2.0 bar (14.5 - 29 psi)** | | * 500 ml. cup |

# Mini Xtreme

## Mini Xtreme Spare parts

The Sagola Mini Xtreme Gravity is covered by a **3-year** manufacturers warranty from SAGOLA.
Please follow the recommended housekeeping and maintenance procedure as prescribed in the operation manuals.

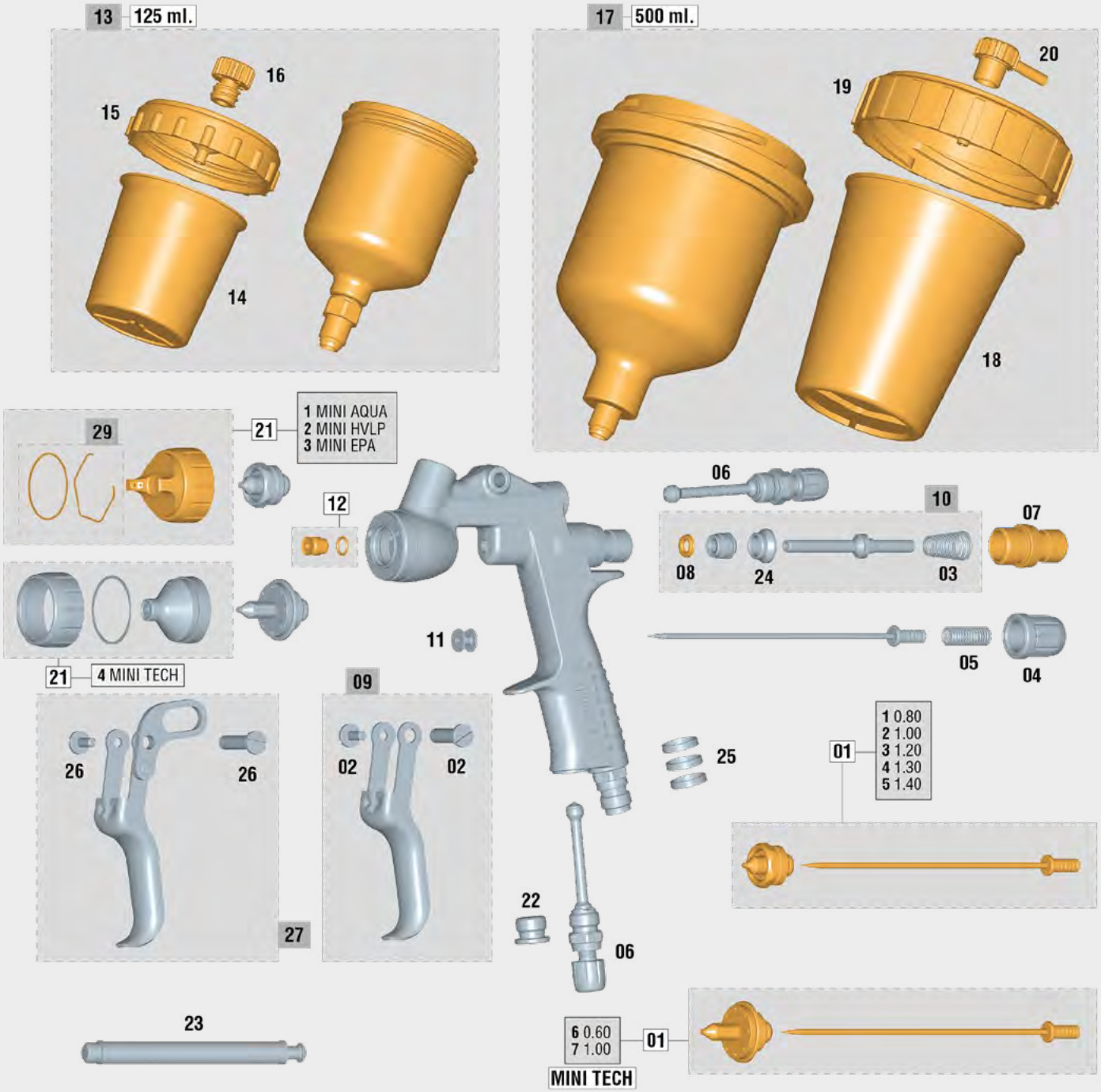


*Last updated version of the exploded view*

*Este despiece no es la lista de materiales de la pistola*

# Mini Xtreme

We call critical parts those that can stop the work of a spraygun: wear parts, gaskets, packings,... Sagola sprayguns design offers **ONLY 6 CRITICAL PARTS ( )**. Only 6 references in store to provide a 100% effective after-sales service.

## SPARE PARTS — MINI XTREME

| No. | Code | Description |
|---|---|---|
| **01/1** | **10011200** | **Kit nozzle + needle 0.80 Serie Mini** |
| **01/2** | **10011201** | **Kit nozzle + needle 1.00 Serie Mini** |
| **01/3** | **10011202** | **Kit nozzle + needle 1.20 Serie Mini** |
| **01/4** | **10011203** | **Kit nozzle + needle 1.30 Serie Mini** |
| **01/5** | **10011204** | **Kit nozzle + needle 1.40 Serie Mini** |
| **01/6** | **10011216** | **Kit nozzle + needle 0.60 Mini Tech** |
| **01/7** | **10011217** | **Kit nozzle + needle 1.00 Mini Tech** |
| 02 | 56418429 | Kit screw + trigger shaft (short) |
| 03 | 54710312 | Conical spring 10,6 x 6.7 x 29 x 1,05 |
| 04 | 56415121 | Product regulator wheel |
| 05 | 56410043 | Spring + stop |
| 06 | 56415252 | Air flow / fan regulator |
| **07** | **56411623** | **Product needle guide box** |
| **08** | **56418441** | **Air valve washer (6 units)** |
| 09 | 56418637 | Trigger Kit |
| 10 | 56418644 | Air valve Kit |
| 11 | 51910605 | Bushing |
| **12** | **56418034** | **Complete packing nut Kit** |
| **13** | **56418081** | **Gravity cup 125 ml.** |

## SPARE PARTS — MINI XTREME

| No. | Code | Description |
|---|---|---|
| 14 | 56418061 | Product filter 0,125 L cup (6 units) |
| 15 | 57111502 | Gravity cup top cover 0,125 L |
| 16 | 55712119 | Connection plug dripless flat |
| **17** | **56418080** | **Gravity cup 500 ml.** |
| 18 | 56418059 | Product filter 0,5 L cup (10 units) |
| 19 | 57111509 | Gravity cup top cover 0,5 L |
| 20 | 55712157 | Connection plug dripless |
| **21/1** | **56418524** | **Aircap Mini AQUA** |
| **21/2** | **56418526** | **Aircap Mini HVLP** |
| **21/3** | **56418525** | **Aircap Mini EPA** |
| **21/4** | **56418598** | **Aircap Mini TECH** |
| 22 | 55712171 | Connection plug 1/2” x20 |
| 23 | 50210214 | Air valve assembly wrench |
| 24 | 54110012 | Air valve seating |
| 25 | 56418635 | Identification ring kit |
| 26 | 56418439 | Kit screw + trigger shaft (long) |
| 27 | 56418714 | Special Mini Tech Trigger Kit |
| 29 | 56418680 | Gasket nozzle Kit |

***This exploded view is not the material list of the spraygun***

***Clean the spraygun correctly. No metal tools. Only brushes. Lubricate the moving parts of the gun after each cleaning.***

**Cleaning kit** Brush and sticks for optimum cleaning outside and inside the gun.

**Code** 40000086

**Lubricant grease** Natural grease. High consistency, even under extreme temperatures. Long lasting, it doesn’t lose properties over the time. 100 ml. can.

**Code** 56418589

(see page 105)

# 475 XTech

# The importance of small details

**Precision solutions for tiny details and retouches.**
**Very light injected-aluminium body.**
**Very high quality of spray.**

| TECHNICAL DATA | | 475 XTECH |
|---|---|---|
| Weight with cup (with air flow regulator) | 339.4 grams | 0.75 lbs |
| Weight without cup (with air flow regulator) | 272.9 grams | 0.60 lbs |
| Dimensions with cup (with air flow regulator) | 12.1 x 6.7 x 28.3 cm. | 4.76 x 2.64 x 11.14 “ |
| Dimensions without cup | 10.9 x 3.3 x 15.2 cm. | 4.29 x 1.3 x 5.98 “ |
| Air inlet connection | BSP 1/4” Male | |
| Cup | 125 ml. (4,23 fl oz.) capacity<br>Cup with anti-drip system | |
| Product filter | Includes 80-mesh product filters | |
| Recommended working pressure | 2 bar | 29 psi |
| Average sound pressure level | 80 dB | |
| Materials in contact with the product | Anodized aluminum, chromed aluminum, POM, Stainless steel and Teflon | |

# 475 XTech

The SAGOLA 475 XTech spraygun that due to its reduced dimension becomes ideal for shadings, little retouches and/or painting of small parts.

Injected aluminum body, very light. Manufactured with Sagola high technology to provide a very high quality of atomization.

This model incorporates the high quality gravity cup with a 125 ml capacity. Includes paint filter.

Available with three aircaps. Variety of nozzles to give great precision to the retouching and painting of parts.

The **Sagola 475 XTech**, designed for **precision solutions** in the small details and retouching of bodyshop parts.

### 05 AIRCAP
High quality spray at feathering and retouches.
Nozzle available: 0.50 / 0.80

### 10 AIRCAP
Quick and versatile. Special for metallics and clearcoats.
Nozzle available: 1.00

### R5 AIRCAP
Maximum precision at the tiniest feathering. Definition and regulation. Similar to an airbrush.
Nozzle available: 0.50

## Very light injected-aluminium body
Injected-aluminium body. A highly manageable spraygun with reduced dimensions and low weight.

## High quality of spray
High transfer and low air consumption.

## Air flow regulator
Incorporates air flow regulator, high quality and precision.

**Code 56418417**

## Technical data / Versions

| Recommended application | Nozzle | Aircap | Product output flow | Fan size | Application distance |
|---|---|---|---|---|---|
| RETOUCHES AND FEATHERING | 0.50 | 05 | 60 g/min. (2.12 oz/min.) | 140 mm. (5.5”) | 18 - 20 cm. (7 - 7.9”) |
| | 0.80 | 05 | 73 g/min. (2.57 oz/min.) | 162 mm. (6.4”) | |
| CLEARCOATS | 1.00 | 10 | 90 g/min. (3.17 oz/min.) | 160 mm. (6.3”) | |
| METALLICS | | | | | |
| TINY FEATHERING HIGH DEFINITION | 0.50 | R5 | 38 g/min. (1.34 oz/min.) | - | |

**Air consumption at 2 bar (29 psi):**
**05 Aircap: 100 L/min. (3.53 cfm)**
**10 Aircap: 110 L/min. (3.88 cfm)**
**R5 Aircap: 45 L/min. (1.59 cfm)**

**Recommended pressure:**
**1.5 - 2.0 bar (21.7 - 29 psi)**

| Code 475 XTech |
|---|
| 20140801 |
| 20140802 |
| 20140803 |
| 20140804 |
| 125 ml. cup |

## Accessories

| Code | Description |
|---|---|
| 56418081 | 125 ml. (4.23 fl oz) Gravity cup - *includes product filter* |
| 56418079 | 200 ml. (6.76 fl oz) Gravity cup - *includes product filter* |
| 56418061 | Product filter (6 units) |

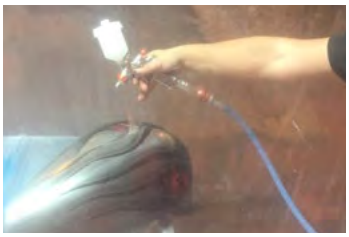

# 475 XTech

## 475 XTech Spare parts

The Sagola 475 XTech is covered by a **3-year** manufacturers warranty from SAGOLA.
Please follow the recommended housekeeping and maintenance procedure as prescribed in the operation manuals.

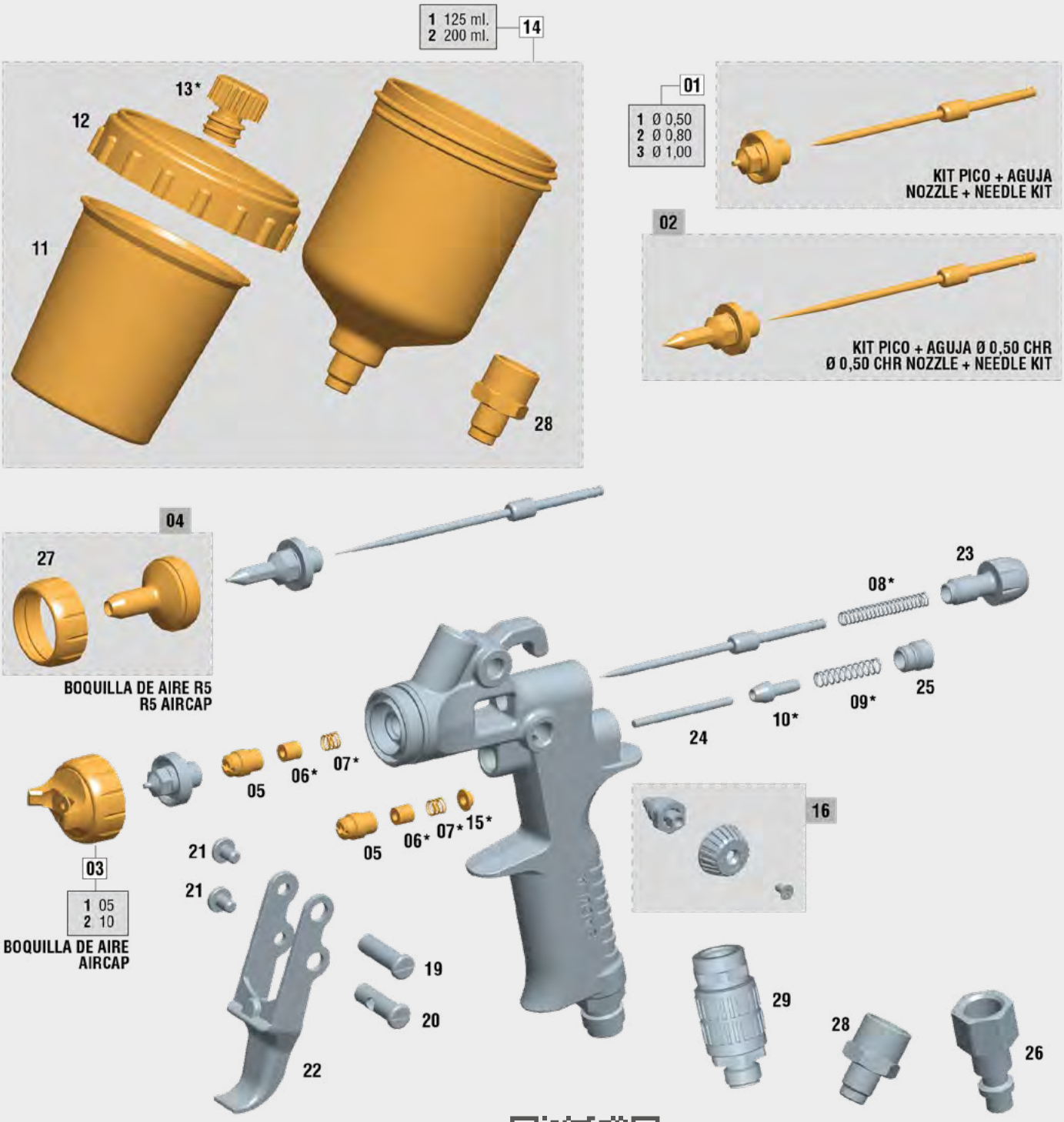


*Last updated version of the exploded view*

# 475 XTech

We call critical parts those that can stop the work of a spraygun: wear parts, gaskets, packings,... Sagola sprayguns design offers **ONLY 6 CRITICAL PARTS ( )**. Only 6 references in store to provide a 100% effective after-sales service.

## SPARE PARTS — 475 XTECH

| No. | Code | Description |
|---|---|---|
| **01/1** | **10011195** | **Kit nozzle + needle 0.50 Serie 475** |
| **01/2** | **10011197** | **Kit nozzle + needle 0.80 Serie 475** |
| **01/3** | **10011198** | **Kit nozzle + needle 1.00 Serie 475** |
| **02** | **10011196** | **Kit nozzle + needle 0.50 CHR Serie 475** |
| **03/1** | **56418246** | **Aircap 05** |
| **03/2** | **56418247** | **Aircap 10** |
| **04** | **56418271** | **Aircap R5 + nut** |
| **05** | **57212215** | **Packing gland Screw** |
| **06** | **54210224** | **Packing closure washer** |
| **07** | **54710204** | **Cylindrical spring 5 x 9 x 0.5** |
| 08 | 54710202 | Cylindrical spring 4.5 x 40 x 0.6 |
| 09 | 54710203 | Cylindrical spring 4.9 x 30 x 0.6 |
| 10 | 57510703 | Air valve |
| 11 | 56418061 | Gravity cup product filter (6 units) |
| 12 | 57111502 | Gravity cup lid |
| 13 | 55712119 | Connection plug dripless flat |

## SPARE PARTS — 475 XTECH

| No. | Code | Description |
|---|---|---|
| **14/1** | **56418081** | **Gravity cup 0.125 L** |
| 14/2 | 56418079 | Gravity cup 0.200 L |
| **15** | **51911519** | **Valve spring stop bushing** |
| 16 | 56418508 | Fan regulator Kit |
| 19 | 53110911 | Trigguer shaft |
| 20 | 53110011 | Pusher shaft |
| 21 | 57211502 | Trigger shaft screw |
| 22 | 56413703 | Gatillo |
| 23 | 57810311 | Product regulator wheel |
| 24 | 50310102 | Air valve needle |
| 25 | 56414921 | Air valve plug + gasket |
| 26 | 11020520 | Connector BSPP 1/4" F US-Mil (2 units) |
| 27 | 57410445 | Aircap nut |
| 28 | 55711513 | Coupling M12x150 F - M10x100 M |
| 29 | 56418417 | Air flow regulator 1/4" M-F |

***This exploded view is not the material list of the spraygun***

***Clean the spraygun correctly. No metal tools. Only brushes. Lubricate the moving parts of the gun after each cleaning.***

**Cleaning kit** Brush and sticks for optimum cleaning outside and inside the gun.

**Code** 40000086

**Lubricant grease** Natural grease. High consistency, even under extreme temperatures. Long lasting, it doesn't lose properties over the time. 100 ml. can.

**Code** 56418589

(see page 105)

# Classic Pro XD

**The Sagola Classic Pro XD Primer Gun incorporates EPA and HVLP high transfer air caps.**

**"Metal to metal" technology. No joints or plastic parts in the product area.**

**Nozzle and needle made of stainless steel.**

**Matt chrome-plated injected aluminum body.**

**Maximum ergonomics and comfort.**

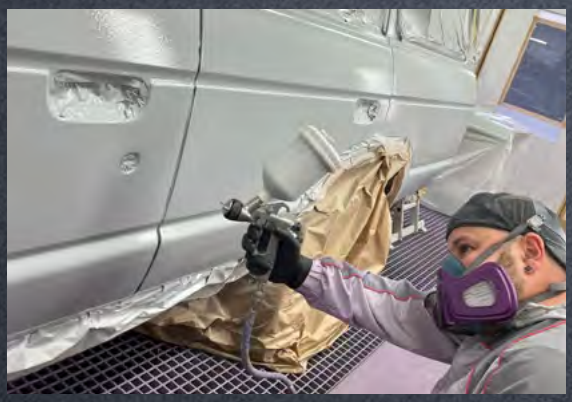

# High transfer in fillers and primers

| TECHNICAL DATA | | CLASSIC PRO XD |
|---|---|---|
| Weight with cup | 665 grams | 1.47 lbs |
| Weight without cup | 480.8 grams | 1.06 lbs |
| Dimensions with cup | 17.7 x 10.5 x 33.3 cm. | 6.97 x 4.13 x 13.11 " |
| Dimensions without cup | 17.9 x 1.9 x 17.7 cm. | 7.05 x 0.75 x 6.96 " |
| Air inlet connection | BSP 1/4" Male | |
| Cup | 650 ml. (22 fl oz.) capacity<br>Cup with anti-drip system | |
| Recommended working pressure | 2 bar | 29 psi |
| Materials in contact with the product | Anodized aluminum, chromed aluminum, POM, Stainless steel and Teflon | |

# Classic Pro XD aircaps technical data / Versions

**21 EPA Aircap.** Sagola EPA high transfer technology that combines high transfer rates with high atomization capacity. Low air consumption.

| Recommended application | Recommended nozzle | Product output flow | Fan size | Application distance | Code Classic Pro XD |
|---|---|---|---|---|---|
| FINISHES | 1.30 | 139 g/min. (4.90 oz/min.) | 283 mm. (11.1”) | 18 - 20 cm. (7 - 7.9”) | 10141633 |
| | 1.40 | 143 g/min. (5.04 oz/min.) | 285 mm. (11.2”) | | 10141620 |
| SANDING FILLERS | 1.60 | 147 g/min. (5.19 oz/min.) | 290 mm. (11.4”) | | 10141623 |
| | 1.80 | 179 g/min. (6.31 oz/min.) | 320 mm. (12.6”) | | 10141625 |

**Air consumption at 2 bar (29 psi):**
**225 L/min. (7.95 cfm)**

**Recommended pressure:**
**1.5 - 2.0 bar (21.7 - 29 psi)**

**HVLP Aircap.** Compliance with the strictest environmental regulations. High Transfer HVLP Technology. High application speed.

| Recommended application | Recommended nozzle | Product output flow | Fan size | Application distance | Code Classic Pro XD |
|---|---|---|---|---|---|
| FINISHES | 1.30 | 137 g/min. (4.83 oz/min.) | 281 mm. (11,1”) | 12 - 15 cm. (4.7 - 5.9”) | 10141634 |
| | 1.40 | 143 g/min. (5.04 oz/min.) | 285 mm. (11.2”) | | 10141621 |
| SANDING FILLERS | 1.60 | 202 g/min. (7.13 oz/min.) | 250 mm. (9.8”) | | 10141624 |
| | 1.80 | 235 g/min. (8.29 oz/min.) | 280 mm. (11.2”) | | 10141626 |

**Air consumption at 2 bar (29 psi):**
**355 L/min. (11.54 cfm)**

**Recommended pressure:**
**1.5 - 2.0 bar (21.7 - 29 psi)**

**25 & 36 Aircaps.** Specially designed for the application of high thickness fillers.
**28 Aircap.** The best option for the application of gun fillers on large surfaces.
High product flow rates for thick products.

| Recommended application | Nozzle | Aircap | Product output flow | Fan size | Application distance | Code Classic Pro XD |
|---|---|---|---|---|---|---|
| FILLERS HIGH THICKNESS | 2.00 | **25** | 218 g/min. (7.69 oz/min.) | 250 mm. (9.8”) | 18 - 20 cm. (7 - 7.9”) | 10141627 |
| | 2.50 | **36** | 249 g/min. (8.78 oz/min.) | 280 mm. (11.2”) | | 10141629 |
| GUN FILLER | 2.80 | **28** | 263 g/min. (9.29 oz/min.) | 250 mm. (9.8”) | | 10141630 |

**Air consumption at 2 bar (29 psi):**
**25 Aircap: 155 L/min. (5.47 cfm)**
**36 Aircap: 205 L/min. (7.24 cfm)**
**28 Aircap: 240 L/min. (8.48 cfm)**

**Recommended pressure:**
**1.8 - 2.5 bar (26.10 - 36.26 psi)**

# Classic Pro XD

## Classic Pro XD Spare parts

The Sagola Classic Pro XD is covered by a **3-year** manufacturers warranty from SAGOLA.
Please follow the recommended housekeeping and maintenance procedure as prescribed in the operation manuals.

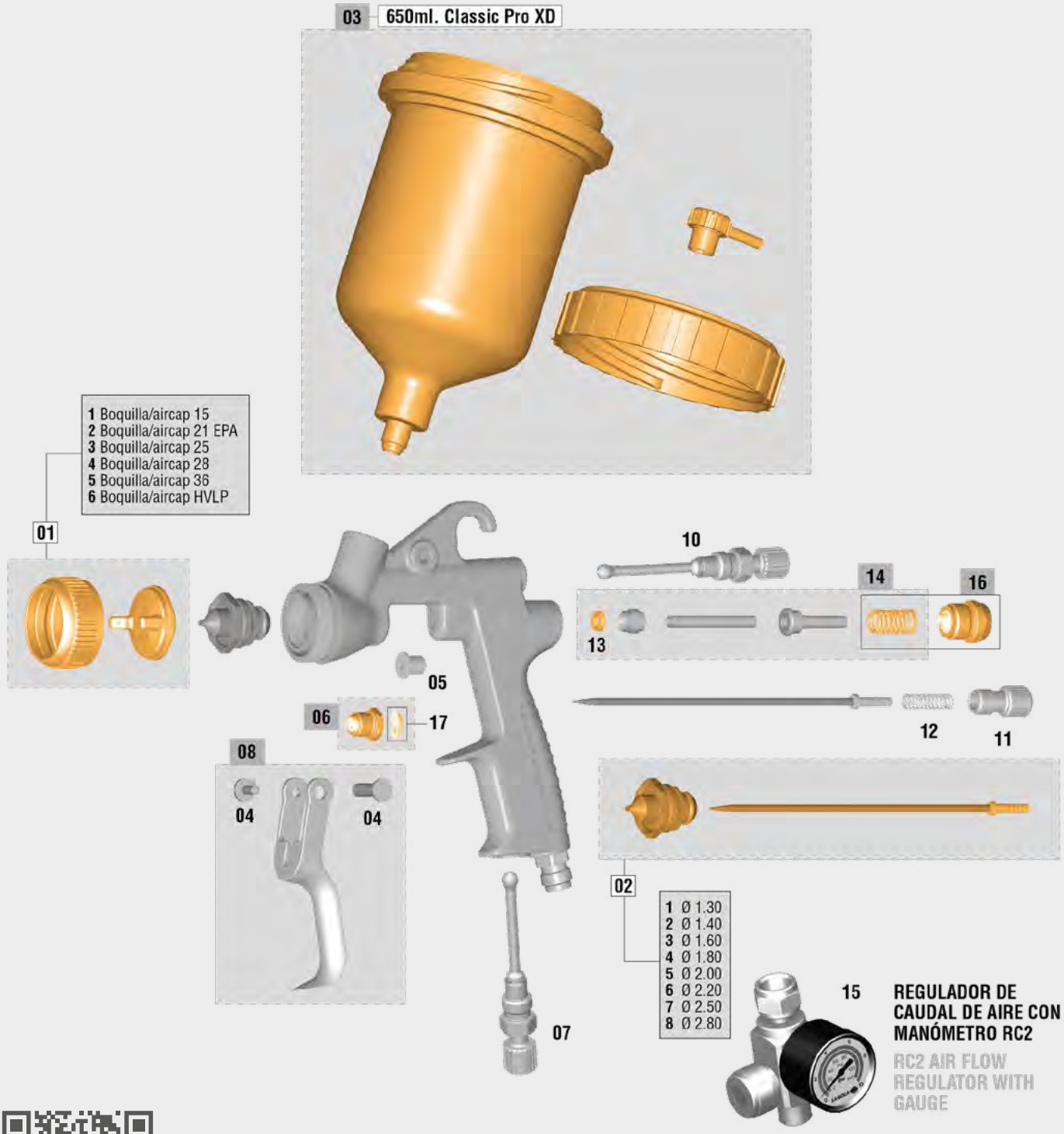


*Last updated version of the exploded view*

# Classic Pro XD

We call critical parts those that can stop the work of a spraygun: wear parts, gaskets, packings,... Sagola sprayguns design offers **ONLY 6 CRITICAL PARTS ( )**. Only 6 references in store to provide a 100% effective after-sales service.

## SPARE PARTS — CLASSIC PRO XD

| No. | Code | Description |
|---|---|---|
| **01/1** | **56418638** | **Aircap 15 + nut (black)** |
| **01/2** | **56418639** | **Aircap 21 EPA + nut (black)** |
| **01/3** | **56418640** | **Aircap 25 + nut (black)** |
| **01/4** | **56418641** | **Aircap 28 + nut (black)** |
| **01/5** | **56418642** | **Aircap 36 + nut (black)** |
| **01/6** | **56418643** | **Aircap HVLP + nut (black)** |
| **02/1** | **10011293** | **Kit nozzle + needle 1.30 Serie CI Pro XD** |
| **02/2** | **10011254** | **Kit nozzle + needle 1.40 Serie CI Pro XD** |
| **02/3** | **10011255** | **Kit nozzle + needle 1.60 Serie CI Pro XD** |
| **02/4** | **10011256** | **Kit nozzle + needle 1.80 Serie CI Pro XD** |
| **02/5** | **10011257** | **Kit nozzle + needle 2.00 Serie CI Pro XD** |
| **02/6** | **10011258** | **Kit nozzle + needle 2.20 Serie CI Pro XD** |
| **02/7** | **10011259** | **Kit nozzle + needle 2.50 Serie CI Pro XD** |
| **02/8** | **10011260** | **Kit nozzle + needle 2.80 Serie CI Pro XD** |
| **03** | **56418085** | **Gravity cup 0.65 L** |
| 04 | 56418429 | Screw + trigger shaft (short) |
| 05 | 51910608 | Trigger needle guide bushing |

## SPARE PARTS — CLASSIC PRO XD

| No. | Code | Description |
|---|---|---|
| **06** | **56411619** | **Complete packing nut Kit** |
| 07 | 49000739 | Fan regulator Kit |
| 08 | 56418637 | Trigger |
| 10 | 49000714 | Fan regulator Kit |
| 11 | 57810380 | Product regulator wheel |
| 12 | 54710275 | Cylindrical spring 6.8 x 31 x 0.9 |
| **13** | **56418494** | **Air valve gasket (6 units)** |
| 14 | 56418481 | Air valve Kit |
| 15 | 40000335 | RC2 air flow regulator |
| **16** | **56418701** | **Product needle guide box + spring** |
| 17 | 54210224 | Packing closure washer |

***This exploded view is not the material list of the spraygun***

***Clean the spraygun correctly. No metal tools. Only brushes. Lubricate the moving parts of the gun after each cleaning.***

**Cleaning kit** Brush and sticks for optimum cleaning outside and inside the gun.

**Code** 40000086

**Lubricant grease** Natural grease. High consistency, even under extreme temperatures. Long lasting, it doesn't lose properties over the time. 100 ml. can.

**Code** 56418589

(see page 105)

# Classic Lux

**Ergonomic**
**Light and comfortable**
**Versatile**
**Variety of applications**

# Robustness and Versatility

**Conventional painting system**
**Nozzles and needles in stainless steel**
**Matt chrome injected aluminum body**
**Maximum ergonomics and comfort**

| TECHNICAL DATA | | CLASSIC LUX |
|---|---|---|
| Weight with cup | 674 grams | 1.49 lbs |
| Weight without cup | 485.5 grams | 1.07 lbs |
| Dimensions with cup | 17.7 x 10.5 x 33 cm. | 6.97 x 4.13 x 13 “ |
| Dimensions without cup | 17.7 x 1.9 x 17.1 cm. | 6.97 x 0.75 x 6.73 “ |
| Air inlet connection | BSP 1/4” Male | |
| Cup | 650 ml. (22 fl oz.) capacity<br>Cup with anti-drip system | |
| Recommended working pressure | 2 bar | 29 psi |
| Materials in contact with the product | Anodized aluminum, chromed aluminum, POM, Stainless steel and Teflon | |

# Classic Lux

The SAGOLA Classic LUX gun offers one of the best quality/price ratios in its range of conventional primer guns.

With a new body design and improved ergonomics, the Classic LUX spraygun expands the range of responses and application solutions.

Single shaft design. Less number of parts, minimum maintenance. No joints between the air and the paint. One piece packing gland. Internal air distributor.

Nozzles and needles in stainless steel. Air, product and fan flow regulators.

**40 AIRCAP**
Primers and fillers
Available nozzles:
1.40 / 1.60 / 1.80

**41 AIRCAP**
Primers and fillers
High thickness
Available nozzles: 2.00

**42 AIRCAP**
Fillers
High viscosity. Gun fillers.
Available nozzles: 2.50

## Cup

650 ml. cup capacity. Includes anti-drip system and paint filter.

## Low air consumption

High quality of aircaps, with low air consumption.

## Body

Novelty in the chrome of the gun body. Matte chrome.

## Nozzle and Needle

Made of stainless steel.

# Classic Lux aircaps technical data / Versions

| Recommended application | Nozzle | Aircap | Product output flow | Fan size | Application distance |
|---|---|---|---|---|---|
| FINISHES | 1.40 | 40 | 218 g/min. (7.7 oz/min.) | 210 mm. (8.26”) | 18 - 20 cm. (7 - 7.9”) |
| PRIMERS AND FILLERS | 1.60 | 40 | 125 g/min. (4.4 oz/min.) | 215 mm. (8.46”) | |
| FILLERS | 1.80 | 40 | 217 g/min. (7.6 oz/min.) | 250 mm. (9.84”) | |
| FILLERS HIGH THICKNESS | 2.00 | 41 | 206 g/min. (7.3 oz/min.) | 255 mm. (10.04”) | 18 - 20 cm. (7 - 7.9”) |
| PUTTIES | 2.50 | 42 | 144 g/min. (5.1 oz/min.) | 215 mm. (8.46”) | |

**Air consumption at 2 bar (29 psi):**
**40 Aircap: 190 L/min. (6.71 cfm)**
**41 Aircap: 210 L/min. (7.42 cfm)**
**42 Aircap: 220 L/min. (7.77 cfm)**

**Recommended pressure:**
**1.5 - 2.5 bar (21.7 - 36.26 psi)**

| Code Classic Lux |
|---|
| 20141406 |
| 20141401 |
| 20141402 |
| 20141404 |
| 20141403 |

# Accessories

| Code | Description |
|---|---|
| 56418420 | Gravity cup 650 ml. (6.76 fl oz) - *includes product filter* |
| 56418017 | Gravity cup product filter 650 ml. (10 units) |
| 40000335 | RC2 Air flow regulator with pressure gauge |

***RC2 Air flow regulator with pressure gauge***
*(See page 105)*

# Classic Lux

## Classic Lux Spare parts

The Sagola Classic Lux is covered by a **3-year** manufacturers warranty from SAGOLA.
Please follow the recommended housekeeping and maintenance procedure as prescribed in the operation manuals.

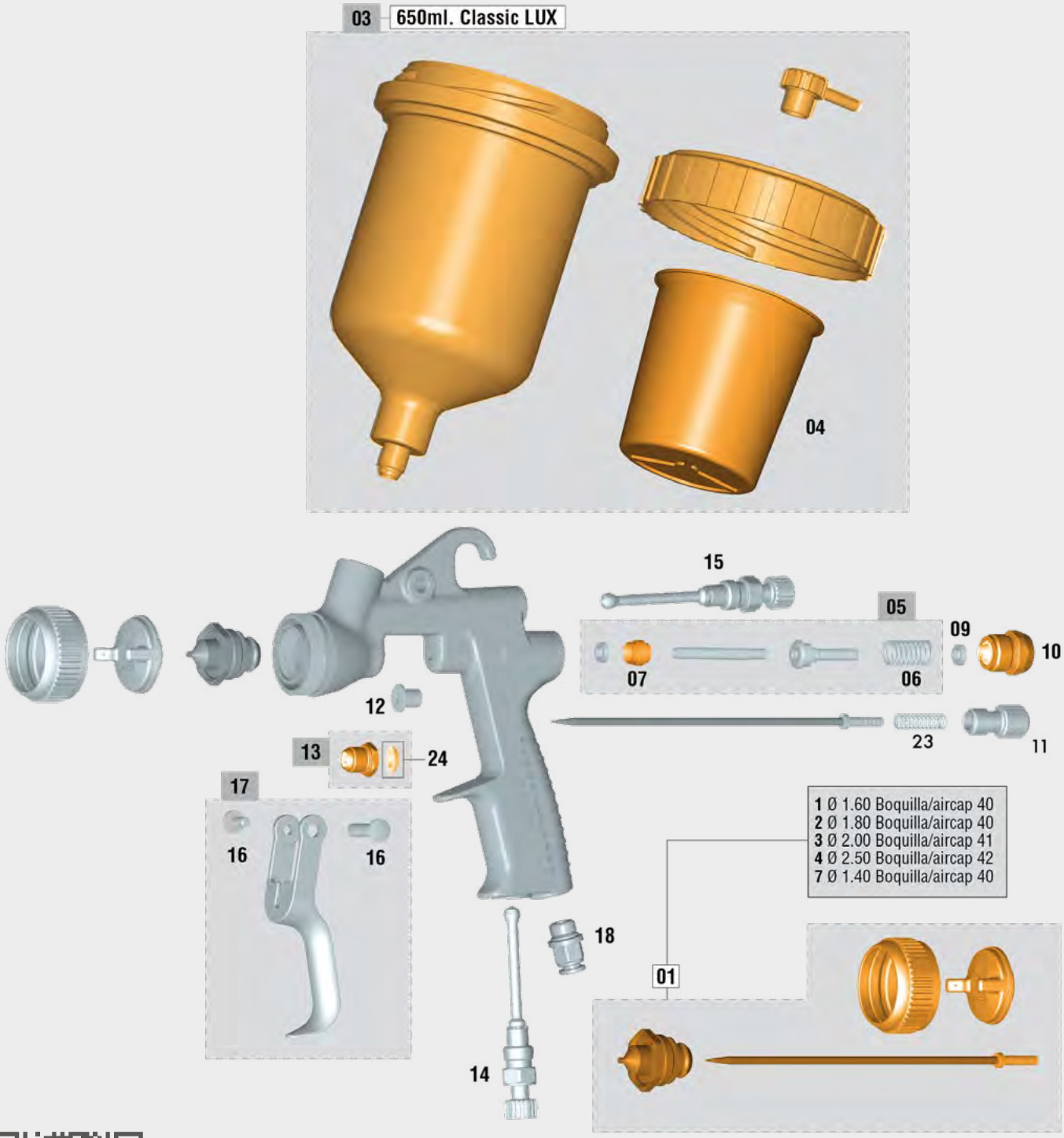


*Last updated version of the exploded view*

# Classic Lux

We call critical parts those that can stop the work of a spraygun: wear parts, gaskets, packings,... Sagola sprayguns design offers **ONLY 6 CRITICAL PARTS ( )**. Only 6 references in store to provide a 100% effective after-sales service.

## SPARE PARTS — CLASSIC LUX

| No. | Code | Description |
|---|---|---|
| **01/1** | **10011370** | **Kit nozzle + needle 1.60 + Aircap 40** |
| **01/2** | **10011371** | **Kit nozzle + needle 1.80 + Aircap 40** |
| **01/3** | **10011372** | **Kit nozzle + needle 2.00 + Aircap 41** |
| **01/4** | **10011373** | **Kit nozzle + needle 2.50 + Aircap 42** |
| **01/7** | **10011380** | **Kit nozzle + needle 1.40 + Aircap 40** |
| **03** | **56418420** | **Gravity cup 650 ml.** |
| 04 | 56418017 | Gravity cup product filter 0.65L (10 units) |
| 05 | 56418715 | Air valve Kit |
| 06 | 54710414 | Cylindrical spring 32 x 11 x 1.1 |
| **07** | **56418494** | **Air valve gasket** |
| 09 | 54250932 | O-ring 11.11 x 1.80 nitrile |
| **10** | **56418701** | **Guide box Kit + spring** |
| 11 | 57810378 | Product regulator wheel |
| 12 | 51910608 | Trigger needle guide bushing |

## SPARE PARTS — CLASSIC LUX

| No. | Code | Description |
|---|---|---|
| **13** | **56411619** | **Complete packing nut Kit** |
| 14 | 56415251 | Air flow regulator Kit |
| 15 | 56415237 | Fan regulator Kit |
| 16 | 56418429 | Screw + trigger shaft (short) |
| 17 | 56418637 | Trigger |
| 18 | 11020520 | Coupling BSPP 1/4" F US-Mil (2 units) |
| 23 | 54710275 | Cylindrical spring 6.8 x 31 x 0.9 |
| 24 | 54210224 | Packing closure washer |

***This exploded view is not the material list of the spraygun***

***Clean the spraygun correctly. No metal tools. Only brushes. Lubricate the moving parts of the gun after each cleaning.***

**Cleaning kit** Brush and sticks for optimum cleaning outside and inside the gun.

**Code** 40000086

**Lubricant grease** Natural grease. High consistency, even under extreme temperatures. Long lasting, it doesn't lose properties over the time. 100 ml. can.

**Code** 56418589

(see page 105)

# Junior G

# Economic, ergonomic

The SAGOLA Junior G spraygun is a very economical gravity spray gun in contrast to its features.

Spraygun with a robust body. Lightweight and ergonomic exclusive design by Sagola.

Spraygun suitable for working with 1.5 HP power compressors. Very low air consumption.

Incorporates air, product and fan flow regulators. 600 ml. cup capacity. Quick connector included.

Two packaging formats, in box or blister.

*BSPP 1/4" quick connector included*

| TECHNICAL DATA | | JUNIOR G |
|---|---|---|
| Weight with cup | 493 grams | 1.09 lbs |
| Weight without cup | 371 grams | 0.82 lbs |
| Dimensions with cup | 17 x 10 x 32 cm. | 6.7 x 3.9 x 12.6 " |
| Dimensions without cup | 14.5 x 5.4 x 17 cm. | 5.7 x 2.1 x 6.7 " |
| Air inlet connection | BSP 1/4" Male | |
| Cup | 600 ml. (20.3 fl oz.) capacity<br>Cup with anti-drip system | |
| Recommended working pressure | 2 bar | 29 psi |
| Materials in contact with the product | Anodized aluminum, chromed aluminum, POM, Stainless steel and Brass | |

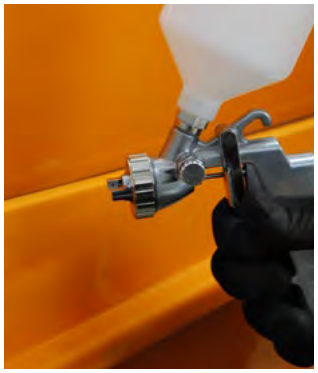

## Technical data / Versions

| Recommended application | Version | Product output flow | Fan size | Application distance | Code Junior G | Code Junior G |
|---|---|---|---|---|---|---|
| FINISHES | 1.40 | 189 g/min. (6.67 oz/min.) | 230 mm. (9.06") | 18 - 20 cm. (7 - 7.9") | 20141904 | - |
| FINISHES AND PRIMERS | 1.60 | 194 g/min. (6.84 oz/min.) | 255 mm. (10.04") | | 20141903 | - |
| FILLERS AND PRIMERS | 1.80 | 221 g/min. (7.80 oz/min.) | 265 mm. (10.43") | | 20141902 | 20141905 |
| | | | | | Custom box | Blister |

**Air consumption at 2 bar (29 psi):**
**1.40/1.60: 125 L/min. (4.4 cfm)**
**1.80: 115 L/min. (4 cfm)**

**Recommended pressure:**
**2.0 bar (29 psi)**

## Sagola 474

# Mini airbrush gun

Small-sized gravity spraygun special for retouches. Economic spraygun.

Ideal for painting small areas and marking parts.

Incorporates air, product and fan flow regulators. 120 ml. gravity cup capacity.

It is presented in a cunstomized box and in two versions of nozzles, 0.80 and 1.00 for sale.

| TECHNICAL DATA | | SAGOLA 474 |
|---|---|---|
| Weight with cup | 325 grams | 0.72 lbs |
| Weight without cup | 273 grams | 0.60 lbs |
| Dimensions with cup | 11.5 x 6.5 x 24 cm. | 4.53 x 2.56 x 9.45 “ |
| Dimensions without cup | 10.5 x 3.2 x 15.5 cm. | 4.13 x 1.26 x 6.10 “ |
| Air inlet connection | BSP 1/4” Male | |
| Cup | 120 ml. (4.06 fl oz.) capacity<br>Cup with anti-drip system | |
| Recommended working pressure | 2 bar | 29 psi |
| Materials in contact with the product | Anodized aluminum, chromed aluminum, POM, Stainless steel and Teflon | |

## Technical data / Versions

| Recommended application | Version | Product output flow | Fan size | Application distance | Code Sagola 474 |
|---|---|---|---|---|---|
| FINE FEATHERING | 0.80 | 37 g/min. (1.31 oz/min.) | 135 mm. (5.31”) | 18 - 20 cm. (7 - 7.9”) | 10151701 |
| SMALL AREAS AND PARTS MARKING | 1.00 | 58 g/min. (2.05 oz/min.) | 155 mm. (6.10”) | | 10151702 |
| | | | | | Custom box |

**Air consumption at 2 bar (29 psi):**
**0.80: 75 L/min. (2.65 cfm)**
**1.00: 70 L/min. (2.47 cfm)**

**Recommended pressure:**
**2.0 bar (29 psi)**

# Junior G

## Junior G Spare parts

The Sagola Junior G is covered by a **3-year** manufacturers warranty from SAGOLA.
Please follow the recommended housekeeping and maintenance procedure as prescribed in the operation manuals.

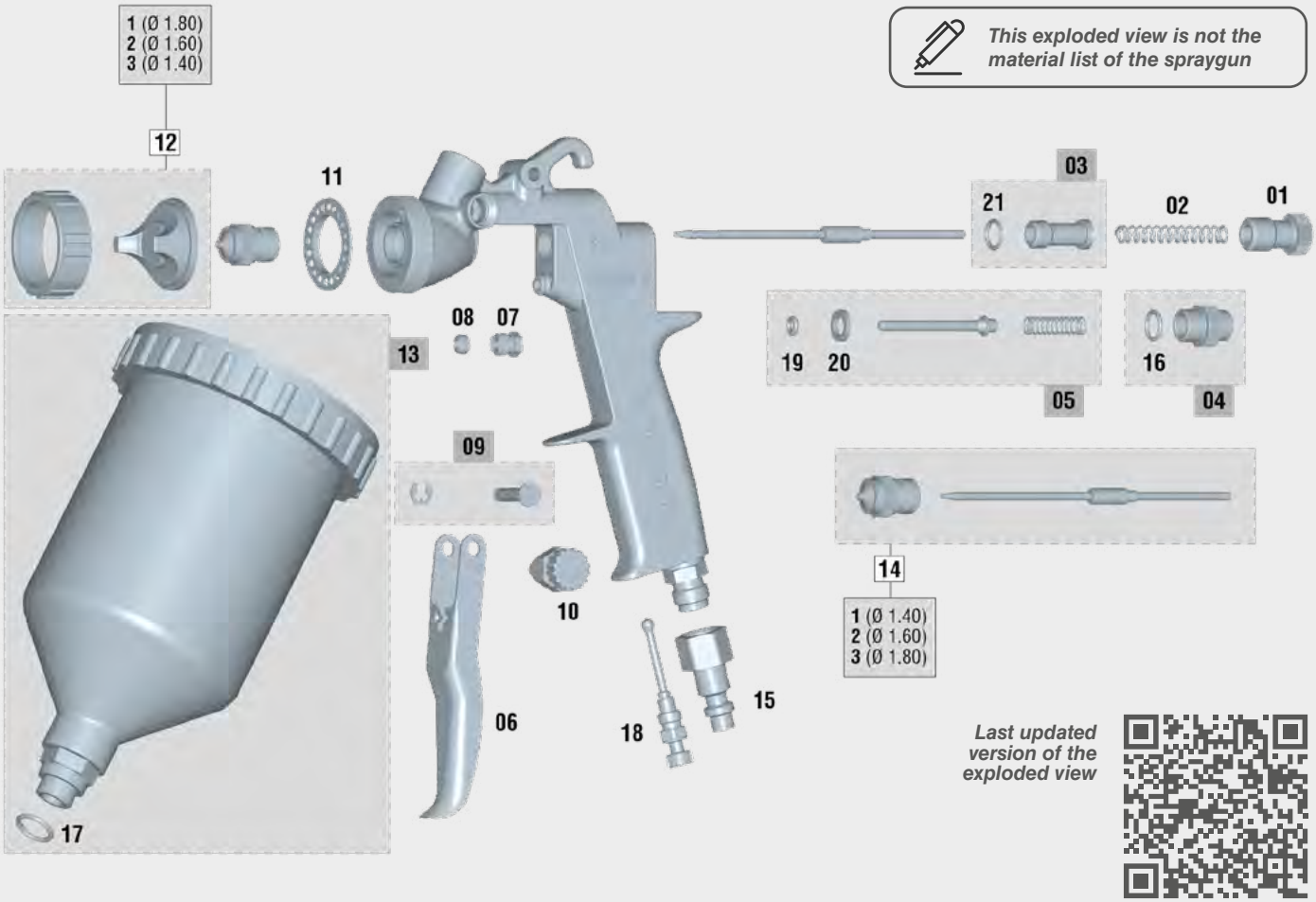


### SPARE PARTS — JUNIOR G

| No. | Code | Description |
|---|---|---|
| 01 | 49000418 | Regulator wheel |
| 02 | 49000419 | Regulator spring |
| 03 | 49000420 | Needle guide box + O-ring Kit |
| 04 | 49000421 | Valve plug + O-ring Kit |
| 05 | 49000422 | Air valve Kit |
| 06 | 49000423 | Trigger |
| 07 | 49000424 | Packing screw |
| 08 | 49000425 | Packing Kit (6 units) |
| 09 | 49000426 | Trigger shaft + Ring |
| 10 | 49000427 | Fan regulator wheel |
| 11 | 49000428 | Air distributor |
| 12/1 | 49000429 | Kit Aircap 1.80 + Nut |

### SPARE PARTS — JUNIOR G

| No. | Code | Description |
|---|---|---|
| 12/2 | 49000502 | Kit Aircap 1.60 + Nut |
| 12/3 | 49000503 | Kit Aircap 1.40 + Nut |
| 13 | 49000430 | 0.6 L Gravity product cup Kit |
| 14/1 | 49000431 | Kit nozzle + needle 1.40 |
| 14/2 | 49000432 | Kit nozzle + needle 1.60 |
| 14/3 | 49000433 | Kit nozzle + needle 1.80 |
| 15 | 11020520 | Coupling BSPP 1/4" F US-Mil |
| 16 | 49000733 | Valve stop O-ring Kit (5 units) |
| 17 | 49000715 | Nylon seals Kit 14 x 17 E:1.5 mm. |
| 18 | 56415251 | Air flow regulator |
| 19 | 49000735 | Small Tresylene O-ring (5 units) |
| 20 | 49000736 | Big Tresylene O-ring (5 units) |
| 21 | 49000734 | Guide box gasket (5 units) |

# Sagola 474

## Sagola 474 Spare parts

The Sagola 474 is covered by a **3-year** manufacturers warranty from SAGOLA.
Please follow the recommended housekeeping and maintenance procedure as prescribed in the operation manuals.

*Last updated version of the exploded view*

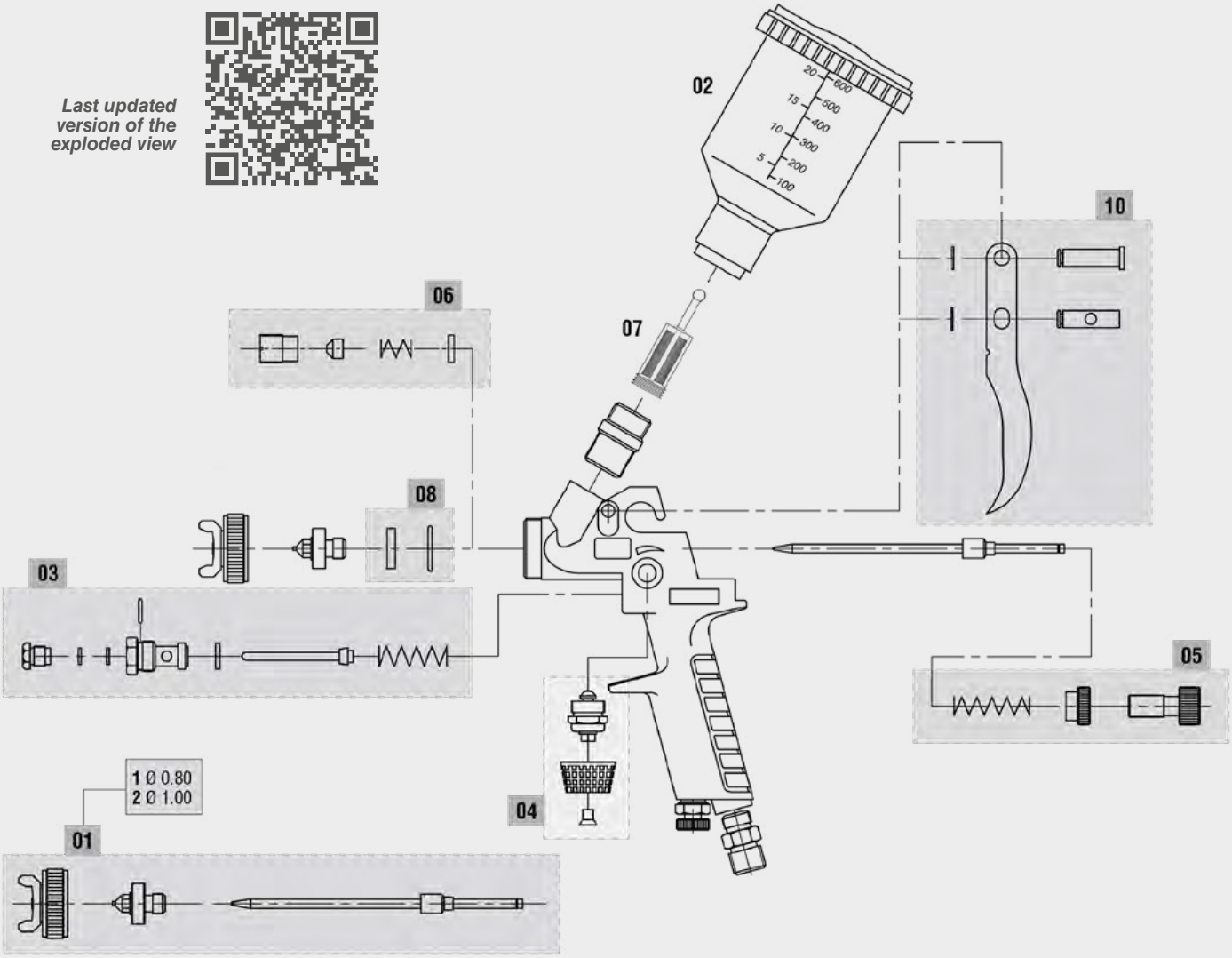


### SPARE PARTS — SAGOLA 474

| No. | Code | Description |
|---|---|---|
| 01/1 | 10011376 | Kit nozzle + needle 0.80 + Aircap |
| 01/2 | 10011377 | Kit nozzle + needle 1.00 + Aircap |
| 02 | 56418431 | Gravity cup 0.120 L 474 |
| 03 | 56418449 | Air valve Kit |
| 04 | 56418450 | Fan regulator Kit |

### SPARE PARTS — SAGOLA 474

| No. | Code | Description |
|---|---|---|
| 05 | 56418451 | Product regulator Kit |
| 06 | 56418452 | Product packing Kit |
| 07 | 56418479 | Product filter (5 units) |
| 08 | 56418584 | Deflector washer + Gasket |
| 10 | 49000757 | Trigger |

*This exploded view is not the material list of the spraygun*

2

# Industrial Bodyshop

We transfer all the experience and quality that our trajectory in the industrial sector gives us to the bodywork of large vehicles.

With a thorough selection of our products to give the highest quality finishes to industries dedicated to the painting of industrial vehicles.

Range of spray guns with high quality finishes, high reliability and robustness.

Pumps and pressure pots, ease of use and minimum maintenance to give a great service to professional painting.

# X 4100 series

X 4100 SERIES

# The Legend of Industrial finishing

| TECHNICAL DATA | | X 4100 SERIES |
|---|---|---|
| Weight with cup: (gravity version) | 722.6 grams | 1.39 lbs |
| Weight with cup: (suction version) | 920 grams | 1.98 lbs |
| Weight without cup: (gravity version) | 496 grams | 1.1 lbs |
| Weight without cup: (suction/pressure version) | 524.75 grams | 1.1 lbs |
| Dimensions with cup: (gravity version) | 17.2 x 10.5 x 34.2 cm. | 6.77 x 4.13 x 13.46 “ |
| Dimensions without cup: (versión succión) | 18.3 X 10.4 X 29.6 cm. | 7.20 x 4.09 x 11.65 “ |
| Dimensions with cup: (gravity version) | 17.2 x 1.9 x 17.3 cm. | 6.78 x 0.75 x 6.83 “ |
| Dimensions without cup: (suction/pressure version) | 17.2 X 1.9 X 18.2 cm. | 6.78 x 0.75 x 7.18 “ |
| Air inlet connection | BSP 1/4” Male | |
| Cup | Gravity: 650 ml. capacity (22 fl oz.) Cup with anti-drip system<br>Suction: 1.000 ml. capacity (34 fl oz.) Deposit with anti-drip system<br>Pressure: Product input through pressure pot or pneumatic pump | |
| Product filter | Gravity: 100 mesh \| Pressure: 60/100 mesh | |
| Recommended working pressure | Gravity: 2 bar (29 psi) | Suction: 2 - 3 bar (29 - 43.5 psi) |
| Average sound pressure level | 80 dB | |
| Materials in contact with the product | Anodized aluminum, chromed aluminum, POM, Stainless steel and Teflon | |

# X 4100 series

**Wide variety of aircaps and multiple fluid nozzles to choose from, fully interchangeable.**

**More than 200 possible nozzle and needle configurations.**

**One "X 4100 series" for every project.**

## Ergonomics

Displacement of the center of gravity thanks to the aluminum construction of the aircaps.

Lighter forged aluminum body. Fatigue reduction in series works.

Swivel filter holder in the pressure version.

## Hardness

Lower maintenance costs = more productivity thanks to our 'metal to metal' technology: No gaskets or plastic parts in the product area.

## Speed

Sagola DVR suction technology to achieve unbeatable application speeds.

## Product savings

Sagola EPA and HVLP high transfer aircaps. Maximum reduction of spray mist.

# X 4100 series

Pressure Version

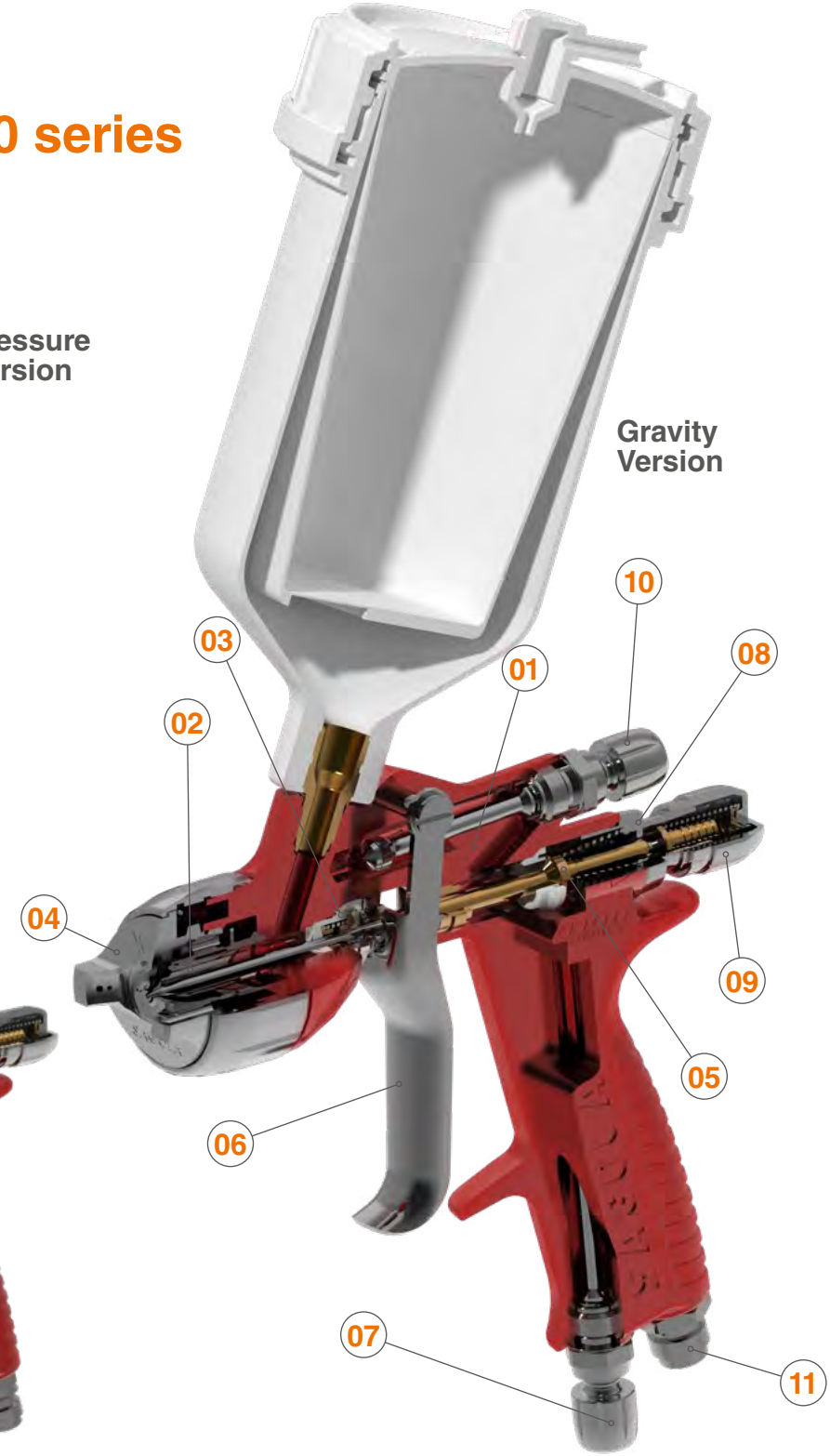


Gravity Version

Suction Version

# Spraygun main news

Unification of spare parts between gravity, suction and pressure versions. Storage costs reduction for those industries that use several.

And the already known advantages:

**01** Forged and anodized aluminum **BODY.** Great robustness, lightness and high corrosion protection.
Register DC 3 300.029

**02 NOZZLES AND NEEDLES** made of stainless steel.
High precision. High flow. Maximum application speed.

**03** High durability **AUTOMATIC PRODUCT PACKING GLAND**
One single piece. Stainless steel body in quick-change format. Avoid manipulation and breakage of the glands and facilitates their disassembly for the integral cleaning of the paint area.
Unique in the market. Patented system P073000321.5.

**04 AIRCAPS**. Made of high-strength and lightweight duralumin (corrosion-free).
HVLP and EPA systems. Fully interchangeable. 4 choice of aircaps compatible with all available fluid nozzle sizes.

High Transfer HVLP Aircap. Designed under the highest environmental standards. Without pressure reducers in the body of the gun. We convert from a conventional system to an HVLP system, only changing the nozzle.

**05 "SOFT FLOW" AIR VALVE**. Smooth trigger even at high air pressure levels. No pressure drops between the 1st and 2nd stage of the trigger. Save paint by regulating air pressure with the trigger partially pulled (1st stage).

**06 TRIGGER AND AXIS**.
100% made of stainless steel. Relocated lever point for more comfortable tightening. Ultra-ergonomic design. Reduces fatigue.

**07 AIR INLET REGULATOR**.
Modern design without sharp edges, it makes easier cleaning.
Higher control precision. Ideal for quick adjustment.

**08 NEEDLE GUIDE BOX**.
Reinforced in stainless steel.
Very high resistance to mechanical abrasion.

**09 PRODUCT REGULATOR**. Sensitive adjustment of the amount of material to be applied.

**10 FAN REGULATOR**. High precision progressive.

**11 AIR INLET**. 1/4" stainless steel.

**12 FILTER HOLDER WITH SWIVEL COUPLING**. Facilitates access to difficult areas and reduces fatigue in continued painting sessions.

**13 1L SUCTION DEPOSIT** made of aluminum. Maximum use of the product. Watertight system with double closure and anti-drip lid

**14 PRODUCT TUBE** for hose alignment. Made of stainless steel.

**"METAL TO METAL" TECHNOLOGICAL VANGUARD**. Very high mechanization technology. The only spraygun on the bodywork market manufactured without any type of gasket, neither inside nor outside, in the closures between the air and the paint. Minimize the number of spare parts.

# X 4100 series

## X 4100 series aircaps technical data GRAVITY / Versions

**XT01 X series Aircap.** Versatility and perfect adaptation to any type of industrial painting project. High gloss finishes, primers and high viscosity paints. Its sustained air consumption, together with the high percentages of product transfer, make SAGOLA's EPA aircaps the most balanced system on the market.

EPA PAINTED SYSTEM

| Recommended application | Recommended nozzle | Aircap | Product output flow | Fan size | Application distance | Code Spraygun |
|---|---|---|---|---|---|---|
| FINISHES, BASECOATS | 1.30 | XT01 | 171 g/min. (6.03 oz/min.) | 250 mm. (9.84") | 18 - 20 cm. (7 - 7.9") | 10142004 |
| GENERAL FINISHES, CLEARCOATS, SINGLE STAGE | 1.40 | XT01 | 175 g/min. (6.17 oz/min.) | 255 mm. (10.04") | | 10142005 |
| PRIMERS | 1.60 | XT01 | 209 g/min. (7.37 oz/min.) | 285 mm. (11.2") | | 10142006 |

**Air consumption at 2 bar (29 psi): 235 L/min. (8.30 cfm)**

**Recommended pressure: 1.8 - 2.2 bar (26 - 32 psi)**

**96 X series Aircap.** The 96 aircap is a legend in industrial finishing. Its high application speed and atomization quality stand out. It is the reference finishing aircap for our most representative suction spraygun.

Maximum speed. Maximum level of brightness.

MEDIUM PRESSURE PAINTED SYSTEM

| Recommended application | Recommended nozzle | Aircap | Product output flow | Fan size | Application distance | Code Spraygun |
|---|---|---|---|---|---|---|
| FINISHES, BASECOATS | 1.30 | 96 | 177 g/min. (6.24 oz/min.) | 260 mm. (10.24") | 18 - 20 cm. (7 - 7.9") | 10142012 |
| GENERAL FINISHES, CLEARCOATS, SINGLE STAGE | 1.40 | 96 | 178 g/min. (6.28 oz/min.) | 270 mm. (10.6") | | 10142001 |
| PRIMERS AND FILLERS | 1.60 | 96 | 216 g/min. (7.62 oz/min.) | 310 mm. (12.2") | | 10142002 |
| FILLERS | 1.80 | 96 | 293 g/min. (10.34 oz/min.) | 380 mm. (15") | | 10142003 |

**Air consumption at 2 bar (29 psi): 250 L/min. (8.83 cfm)**

**Recommended pressure: 1.8 - 2.2 bar (26 - 32 psi)**

# X 4100 series aircaps technical data GRAVITY / Versions

**XT03 series Aircap.** Our HVLP aircap guarantees a reduction in spray mist which means an increase in transfer. Low pressure spraying provides perfect metal particle alignment.

HVLP PAINTED SYSTEM

| Recommended application | Recommended nozzle | Aircap | Product output flow | Fan size | Application distance | Code Spraygun |
|---|---|---|---|---|---|---|
| HIGH QUALITY FINISHES | 1.30 | XT03 | 139 g/min. (4.9 oz/min.) | 260 mm. (10.24”) | 12 - 15 cm. (4.72 - 5.9”) | 10142007 |
| GENERAL FINISHES | 1.40 | XT03 | 143 g/min. (5.04 oz/min.) | 270 mm. (10.6”) | | 10142008 |
| PRIMERS. HIGH SPEED | 1.60 | XT03 | 165 g/min. (5.82 oz/min.) | 310 mm. (12.2”) | | 10142009 |
| FILLERS | 1.80 | XT03 | 202 g/min. (7.13 oz/min.) | 380 mm. (15”) | | 10142010 |

**Air consumption at 2 bar (29 psi): 465 L/min. (16.42 cm)**

**Recommended pressure: 1.8 - 2.0 bar (26 - 29 psi)**

**64S X series Aircap.** Speed and high energy of atomization. Large surface painting with an exceptional high gloss finish. Available to be combined with high size of nozzles in work with high viscosity products. Maximum speed. Maximum level of gloss.

MEDIUM PRESSURE PAINTED SYSTEM

| Recommended application | Recommended nozzle | Aircap | Product output flow | Fan size | Application distance | Code Spraygun |
|---|---|---|---|---|---|---|
| GUN FILLER. HIGH VISCOSITY | 2.20 | 64S | 290 g/min. (10.23 oz/min.) | 280 mm. (11.02”) | 18 - 20 cm. (7 - 7.9”) | 10142011 |

**Air consumption at 2 bar (29 psi): 305 L/min. (10.77 cm)**

**Recommended pressure: 2.0 - 2.5 bar (29 - 36 psi)**

# X 4100 series

## X 4100 series aircaps technical data SUCTION / Versions

**96 X series Aircap.** The 96 aircap is a legend in industrial finishing. Its high application speed and atomization quality stand out. It is the reference finishing aircap for our most representative suction spraygun.

Maximum speed. Maximum level of gloss.

**MEDIUM PRESSURE PAINTED SYSTEM**

| Recommended application | Recommended nozzle | Aircap | Product output flow | Fan size | Application distance | Code Spraygun |
|---|---|---|---|---|---|---|
| HIGH QUALITY FINISHES | 1.40 | 96 | 168 g/min. (5.92 oz/min.) | 235 mm. (9.3”) | 18 - 20 cm. (7 - 7.9”) | 10121001 |
| | 1.60 S | 96 | 235 g/min. (8.29 oz/min.) | 295 mm. (11.6”) | | 10121006 |
| GENERAL FINISHES | 1.80 | 96 | 228 g/min. (8.04 oz/min.) | 285 mm. (11.2”) | | 10121003 |
| PRIMERS | | | | | | |

**Air consumption at 2 bar (29 psi): 280 L/min. (9.88 cfm)**

**Recommended pressure: 2.0 - 2.5 bar (29 - 36 psi)**

**XT01 X series Aircap.** The perfect balance between finish quality and product savings. Versatility to make it compatible with products of different viscosities from fillers to enamels.

High transfer. High quality finishes.

**EPA PAINTED SYSTEM**

| Recommended application | Recommended nozzle | Aircap | Product output flow | Fan size | Application distance | Code Spraygun |
|---|---|---|---|---|---|---|
| GENERAL FINISHES | 1.60 S | XT01 | 241 g/min. (8.5 oz/min.) | 305 mm. (12”) | 18 - 20 cm. (7 - 7.9”) | 10121007 |
| HIGH SPEED LARGE SURFACES | 1.80 | XT01 | 234 g/min. (8.25 oz/min.) | 295 mm. (11.6”) | | 10121005 |

**Air consumption at 2 bar (29 psi): 295 L/min. (10.42 cfm)**

**Recommended pressure: 2.0 - 3.0 bar (29 - 44 psi)**

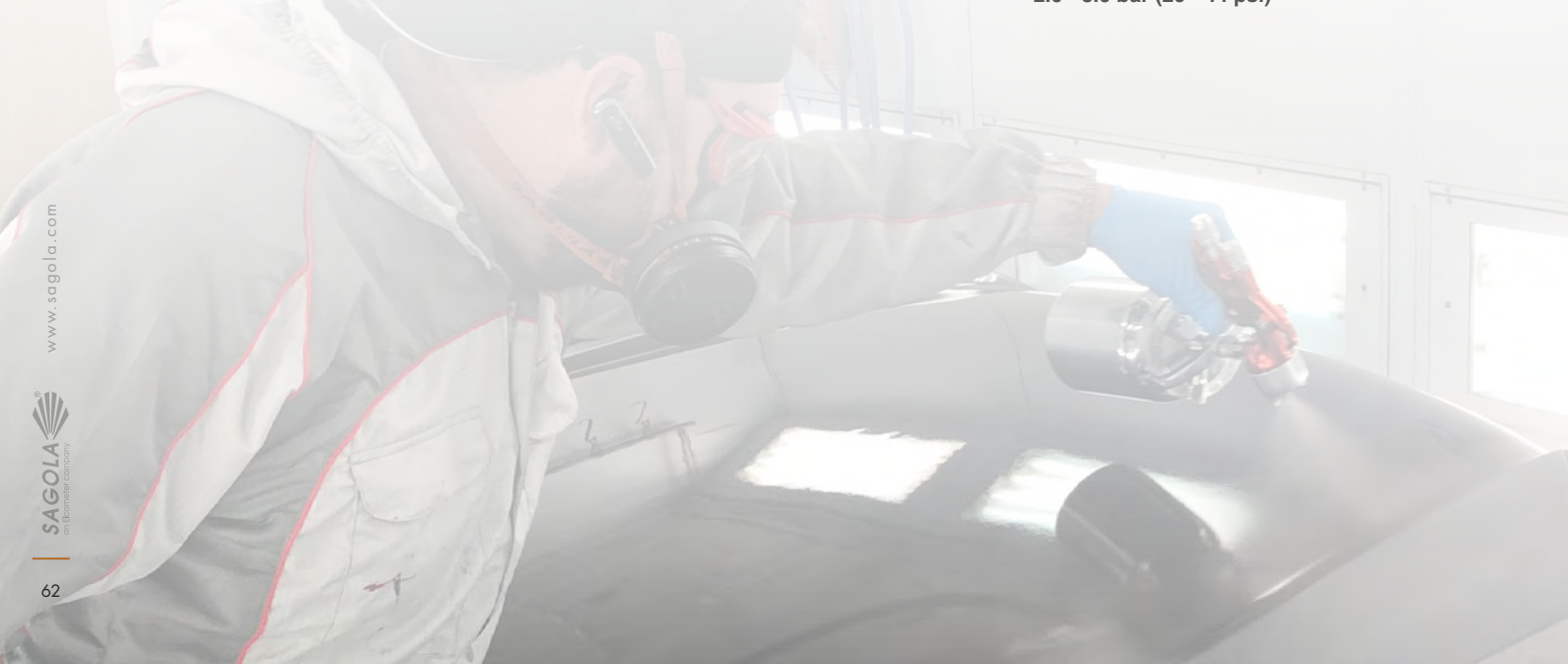

# X 4100 series aircaps technical data PRESSURE / Versions

**XT03/3030 X series Aircap.** Our HVLP aircap guarantees a reduction in spray mist which means an increase in transfer. Low pressure spraying provides perfect metal particle alignment.

**HVLP PAINTED SYSTEM**

| Recommended application | Recommended nozzle | Aircap | Air consumption at 2 bar | Recommended pressure | Application distance | Code Spraygun |
|---|---|---|---|---|---|---|
| FINISHES. BASECOATS. DYES | 1.00 | XT03 | 460 L/min. (16.24 cfm) | 0.5 - 1.0 bar (7 - 14.5 psi) | 12 - 15 cm. (4.7 - 5.9") | 10152406 |
| GENERAL FINISHES PRIMERS | 1.20 | XT03 | 460 L/min. (16.24 cfm) | 1,0 - 1.5 bar (14.5 - 22 psi) | | 10152407 |
| PRIMERS AND BASECOATS | 1.40 | 3030 | 514 L/min. (18.15 cfm) | 2.0 - 2.5 bar (29 - 36 psi) | | 10152412 |

**XT01 B/Super VIT X series Aircap.** Versatility and perfect adaptation to any type of industrial painting project. High gloss finishes, primers and high viscosity paints. Its sustained air consumption, together with the high percentages of product transfer, make SAGOLA's EPA aircaps the most balanced system on the market.

**EPA PAINTED SYSTEM**

| Recommended application | Recommended nozzle | Aircap | Air consumption at 2 bar | Recommended pressure | Application distance | Code Spraygun |
|---|---|---|---|---|---|---|
| METALLICS. CLEARCOATS | 1.00 | XT01 B | 295 L/min. (10.42 cfm) | 0.5 - 1.0 bar (7 - 14.5 psi) | 18 - 20 cm. (7 - 7.9") | 10152408 |
| CLEARCOAT AND FILLERS | 1.20 | XT01 B | 295 L/min. (10.42 cfm) | 1.0 - 1.5 bar (14.5 - 22 psi) | | 10152409 |
| PRIMERS AND FILLERS | 1.40 | XT01 B | 295 L/min. (10.42 cfm) | 2.0 - 2.5 bar (29 - 36 psi) | | 10152410 |
| METALLICS. CLEARCOATS | 1.20 | Super VIT | 380 L/min. (13.42 cfm) | 1.0 - 1.5 bar (14.5 - 22 psi) | | 10152414 |
| CLEARCOAT AND FILLERS | 1.40 | Super VIT | 380 L/min. (13.42 cfm) | 2.0 - 2.5 bar (29 - 36 psi) | | 10152416 |

**777 / 765 X series Aircap.** Speed and high energy of atomization. Large surface painting with an exceptional high gloss finish. Available to be combined with high size of nozzles in work with high viscosity products. Maximum speed. Maximum level of gloss.

**MEDIUM PRESSURE PAINTED SYSTEM**

| Recommended application | Recommended nozzle | Aircap | Air consumption at 2 bar | Recommended pressure | Application distance | Code Spraygun |
|---|---|---|---|---|---|---|
| FINISHES. HIGH QUALITY | 1.00 | 777 | 345 L/min. (12.18 cfm) | 0.8 - 1.5 bar (11.6 - 22 psi) | 18 - 20 cm. (7 - 7.9") | 10152404 |
| FINISHES. HIGH GLOSS | 1.20 | 777 | 345 L/min. (12.18 cfm) | 0.8 - 1.5 bar (11.6 - 22 psi) | | 10152405 |
| FINISHES AND PRIMERS | 1.20 | 765 | 315 L/min. (11.12 cfm) | 0.5 - 1.0 bar (7 - 14.5 psi) | | 10152402 |
| PRIMERS AND BASECOATS | 1.40 | 765 | 315 L/min. (11.12 cfm) | 1.0 - 1.5 bar (14.5 - 22 psi) | | 10152403 |

Both the **product contribution** and the **fan size** in the pressure guns are directly related to the product pressure set by the user, the product viscosity and the characteristics of the hose. Therefore, a reference value cannot be established.

# X 4100 series

## X 4100 Series Gravity Spare parts

The Sagola X 4100 Series Gravity is covered by a **3-year** manufacturers warranty from SAGOLA.
Please follow the recommended housekeeping and maintenance procedure as prescribed in the operation manuals.

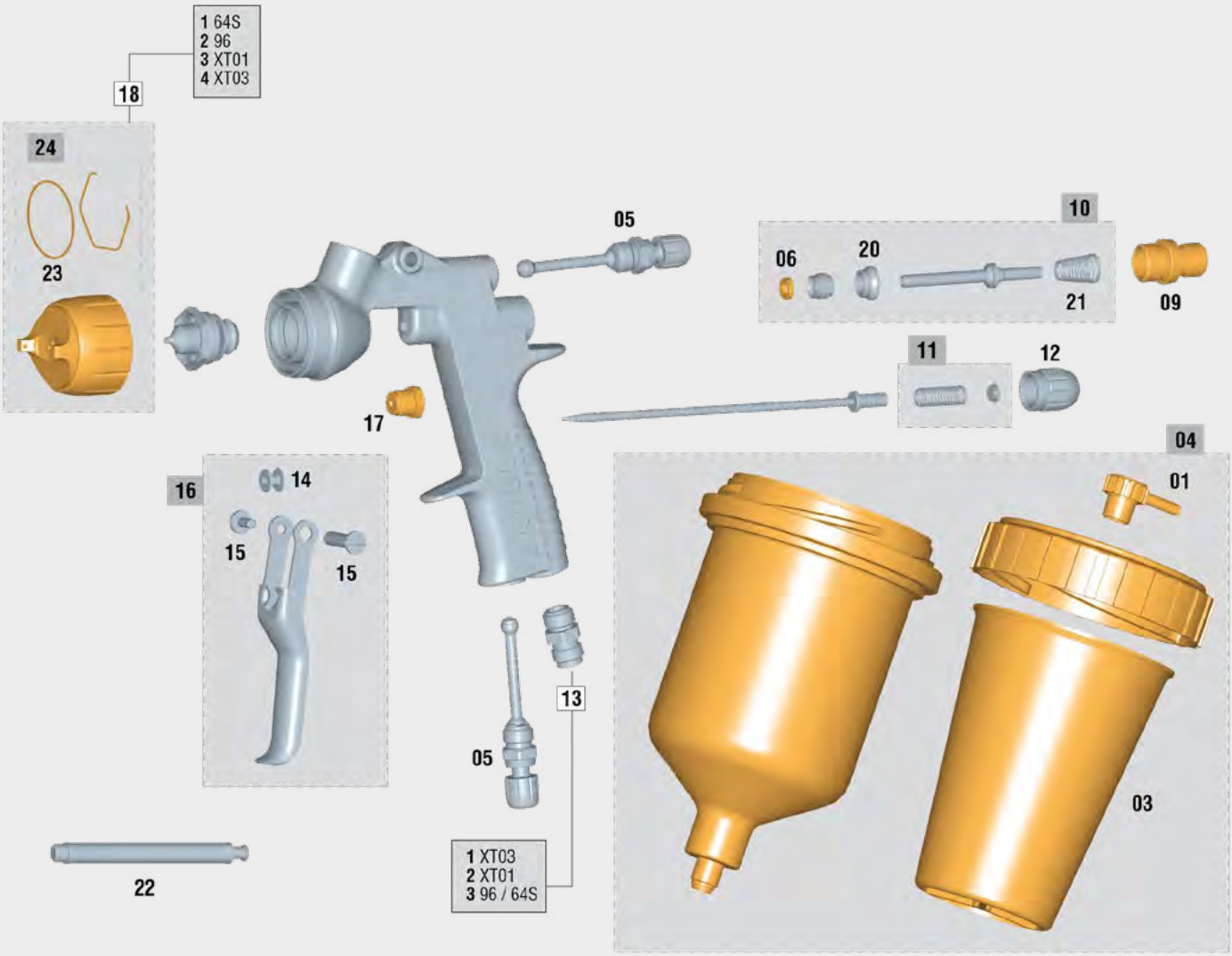


| | |
|---|---|
| **1** (Ø 0.80) | **7** (Ø 1.80) |
| **2** (Ø 1.00) | **8** (Ø 2.00) |
| **3** (Ø 1.20) | **9** (Ø 2.20) |
| **4** (Ø 1.30) | **10** (Ø 2.50) |
| **5** (Ø 1.40) | **11** (Ø 2.80) |
| **6** (Ø 1.60) | |

**ACERO INOXIDABLE**
**STAINLESS STEEL**

| |
|---|
| **12** (Ø 1.80) |
| **13** (Ø 1.40) |
| **14** (Ø 1.50) |
| **15** (Ø 1.80) |
| **16** (Ø 2.20) |
| **17** (Ø 2.80) |

**CARBURO TUNGSTENO**
**TUNGSTEN CARBIDE**

19

*Last updated version of the exploded view*

# X 4100 series

We call critical parts those that can stop the work of a spraygun: wear parts, gaskets, packings,... Sagola sprayguns design offers **ONLY 6 CRITICAL PARTS ( )**. Only 6 references in store to provide a 100% effective after-sales service.

## SPARE PARTS — X 4100 Series Gravity

| No. | Code | Description |
|---|---|---|
| 01 | 55712157 | Connection plug dripless |
| 02 | 57111508 | Gravity cup lid 0.65 L |
| 03 | 56418017 | Product filter 0.65L (10 units) |
| **04** | **56418084** | **Gravity cup 0.65 L** |
| 05 | 56415252 | Fan and air flow regulator |
| **06** | **56418494** | **Air valve washer** |
| **09** | **56411623** | **Product needle guide box** |
| 10 | 56418669 | Air valve Kit |
| 11 | 56418716 | Spring kit |
| 12 | 57810340 | Product Regulator wheel |
| 13/1 | 55711591 | Coupling 1/4” x19 M - 1/4” x19 M (Chicler) |
| 13/2 | 55711562 | Coupling 1/4” x19 M - 1/4” x19 M (Chicler) |
| 13/3 | 55710316 | Coupling 1/4” x19 M - 1/4” x19 M (Chicler) |
| 14 | 51910607 | Bushing |
| 15 | 56418439 | Kit screw + trigger shaft (long) |
| 16 | 56418443 | Trigger kit |
| **17** | **56411616** | **Complete packing nut Kit** |
| **18/1** | **56418575** | **Aircap 64S** |
| **18/2** | **56418573** | **Aircap 96** |
| **18/3** | **56418565** | **Aircap XT01** |
| **18/4** | **56418566** | **Aircap XT03** |

## SPARE PARTS — X 4100 Series Gravity

| No. | Code | Description |
|---|---|---|
| **19/1** | **10011251** | **Kit nozzle + needle 0.80 Serie 41** |
| **19/2** | **10011252** | **Kit nozzle + needle 1.00 Serie 41** |
| **19/3** | **10011253** | **Kit nozzle + needle 1.20 Serie 41** |
| **19/4** | **10011121** | **Kit nozzle + needle 1.30 Serie 41** |
| **19/5** | **10011122** | **Kit nozzle + needle 1.40 Serie 41** |
| **19/6** | **10011123** | **Kit nozzle + needle 1.60 Serie 41** |
| **19/7** | **10011124** | **Kit nozzle + needle 1.80 Serie 41** |
| **19/8** | **10011125** | **Kit nozzle + needle 2.00 Serie 41** |
| **19/9** | **10011126** | **Kit nozzle + needle 2.20 Serie 41** |
| **19/10** | **10011127** | **Kit nozzle + needle 2.50 Serie 41** |
| **19/11** | **10011128** | **Kit nozzle + needle 2.80 Serie 41** |
| **19/12** | **10010129** | **Kit nozzle + needle 1.20 C.T. Serie 41** |
| **19/13** | **10010130** | **Kit nozzle + needle 1.40 C.T. Serie 41** |
| **19/14** | **10010131** | **Kit nozzle + needle 1.50 C.T. Serie 41** |
| **19/15** | **10010132** | **Kit nozzle + needle 1.80 C.T. Serie 41** |
| **19/16** | **10010133** | **Kit nozzle + needle 2.20 C.T. Serie 41** |
| **19/17** | **10010134** | **Kit nozzle + needle 2.80 C.T. Serie 41** |
| 20 | 54110012 | Air valve seating |
| 21 | 54710312 | Conical spring 10.6 x 6.7 x 29 x 1.05 |
| 22 | 50210214 | Air valve assembly key |
| 23 | 56418681 | Gasket nozzle Kit |
| 24 | 56418678 | Gasket washer (5 units) |

***This exploded view is not the material list of the spraygun***

***Clean the spraygun correctly. No metal tools. Only brushes. Lubricate the moving parts of the gun after each cleaning.***

**Cleaning kit** Brush and sticks for optimum cleaning outside and inside the gun.

**Code** 40000086

**Lubricant grease** Natural grease. High consistency, even under extreme temperatures. Long lasting, it doesn’t lose properties over the time. 100 ml. can.

**Code** 56418589

(see page 105)

# X 4100 series

## X 4100 Series Suction Spare parts

The Sagola X 4100 Series Suction is covered by a **3-year** manufacturers warranty from SAGOLA.
Please follow the recommended housekeeping and maintenance procedure as prescribed in the operation manuals.

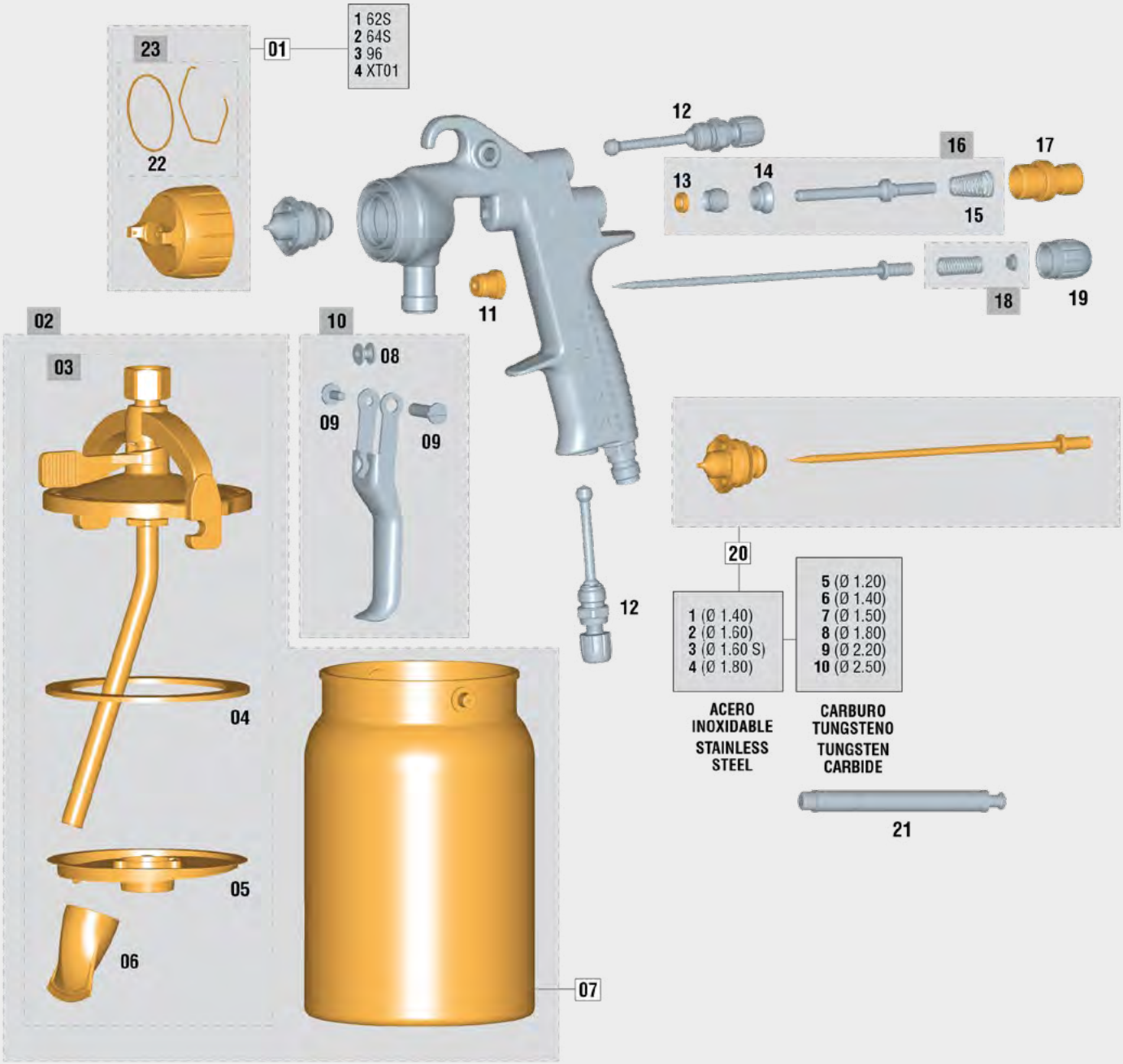


*Last updated version of the exploded view*

# X 4100 series

We call critical parts those that can stop the work of a spraygun: wear parts, gaskets, packings,... Sagola sprayguns design offers **ONLY 6 CRITICAL PARTS ( )**. Only 6 references in store to provide a 100% effective after-sales service.

## SPARE PARTS — X 4100 Series Suction

| No. | Code | Description |
|---|---|---|
| **01/1** | **56418574** | **Aircap 62S** |
| **01/2** | **56418575** | **Aircap 64S** |
| **01/3** | **56418573** | **Aircap 96** |
| **01/4** | **56418565** | **Aircap XT01** |
| **02** | **56418074** | **1L Suction cup Kit** |
| 03 | 56416402 | 1L Suction cup lid flange |
| 04 | 56418509 | Cup closure flanged washer (5 units) |
| 05 | 56418013 | Anti-drip lid (5 units) |
| 06 | 56418014 | Product filter (10 units) |
| 07 | 56412320 | 1L Suction cup |
| 08 | 51910607 | Bushing |
| 09 | 56418439 | Kit screw + trigger shaft (long) |
| 10 | 56418443 | Trigger kit |
| **11** | **56411616** | **Complete packing nut Kit** |
| 12 | 56415252 | Air flow / Fan regulator |
| **13** | **56418494** | **Air valve washer** |
| 14 | 54110012 | Air valve seating |
| 15 | 54710312 | Conical spring 10.6 x 6.7 x 29 x 1.05 |

## SPARE PARTS — X 4100 Series Suction

| No. | Code | Description |
|---|---|---|
| 16 | 56418669 | Air valve Kit |
| **17** | **56411623** | **Product needle guide box** |
| 18 | 56410044 | Spring kit |
| 19 | 57810340 | Product Regulator wheel |
| **20/1** | **10011122** | **Kit nozzle + needle 1.40 Serie 41** |
| **20/2** | **10011123** | **Kit nozzle + needle 1.60 Serie 41** |
| **20/3** | **10011155** | **Kit nozzle + needle 1.60S Serie 41** |
| **20/4** | **10011124** | **Kit nozzle + needle 1.80 Serie 41** |
| **20/5** | **10010129** | **Kit nozzle + needle 1.20 C.T. Serie 41** |
| **20/6** | **10010130** | **Kit nozzle + needle 1.40 C.T. Serie 41** |
| **20/7** | **10010131** | **Kit nozzle + needle 1.50 C.T. Serie 41** |
| **20/8** | **10010132** | **Kit nozzle + needle 1.80 C.T. Serie 41** |
| **20/9** | **10010133** | **Kit nozzle + needle 2.20 C.T. Serie 41** |
| **20/10** | **10010135** | **Kit nozzle + needle 2.50 C.T. Serie 41** |
| 21 | 50210214 | Air valve assembly key |
| 22 | 56418681 | Gasket nozzle Kit |
| 23 | 56418678 | Gasket washer (5 units) |

***This exploded view is not the material list of the spraygun***

***Clean the spraygun correctly. No metal tools. Only brushes. Lubricate the moving parts of the gun after each cleaning.***

**Cleaning kit** Brush and sticks for optimum cleaning outside and inside the gun.

**Code** 40000086

**Lubricant grease** Natural grease. High consistency, even under extreme temperatures. Long lasting, it doesn't lose properties over the time. 100 ml. can.

**Code** 56418589

(see page 105)

# X 4100 series

## X 4100 Series Pressure Spare parts

The Sagola X 4100 Series Pressure is covered by a **3-year** manufacturers warranty from SAGOLA.
Please follow the recommended housekeeping and maintenance procedure as prescribed in the operation manuals.

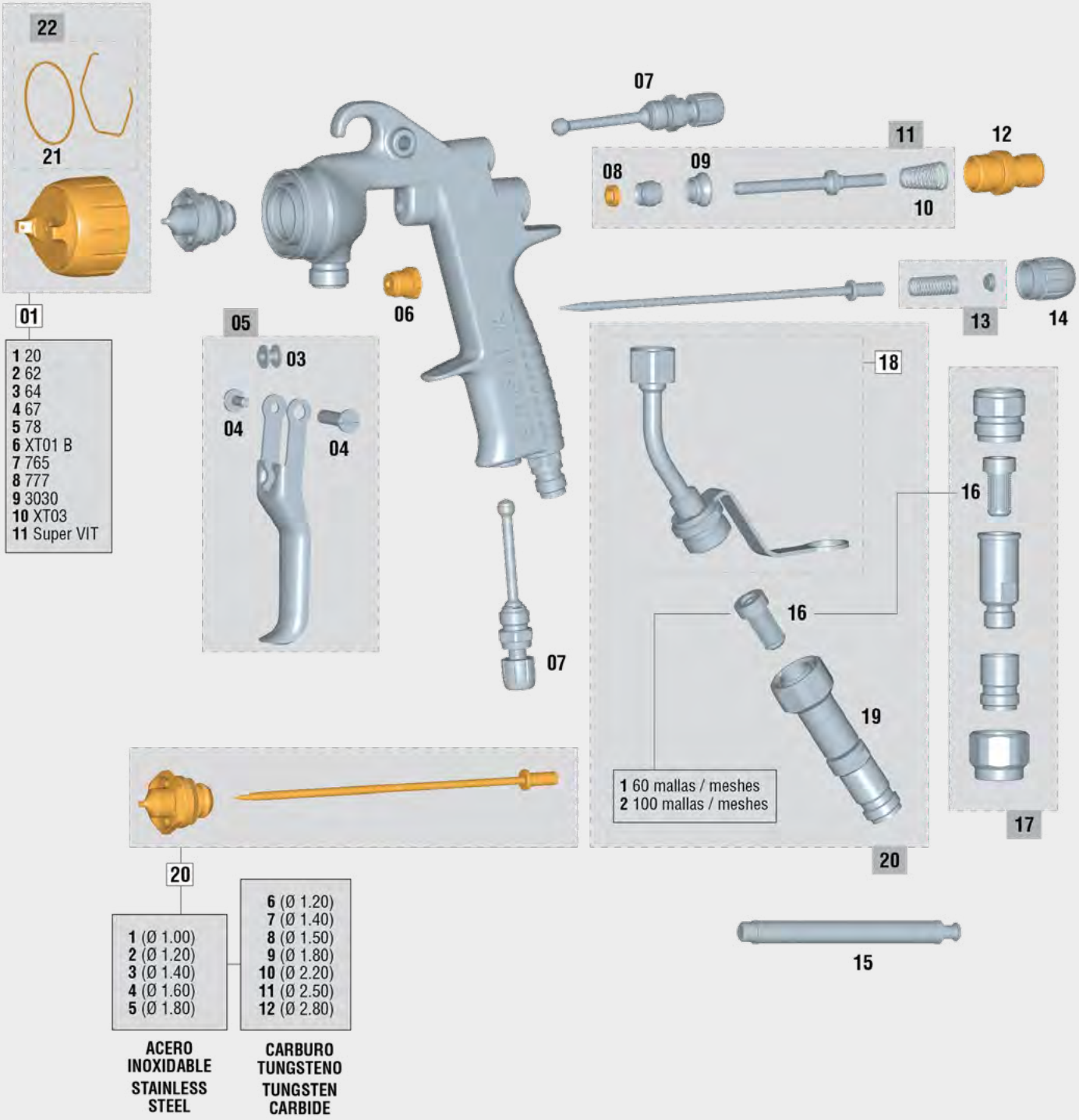


*Last updated version of the exploded view*

# X 4100 series

We call critical parts those that can stop the work of a spraygun: wear parts, gaskets, packings,... Sagola sprayguns design offers **ONLY 5 CRITICAL PARTS ( )**. Only 5 references in store to provide a 100% effective after-sales service.

## SPARE PARTS — X 4100 Series Pressure

| No. | Code | Description |
|---|---|---|
| 01/1 | 56418569 | Aircap 20 |
| 01/2 | 56418567 | Aircap 62 |
| 01/3 | 56418570 | Aircap 64 |
| 01/4 | 56418568 | Aircap 67 |
| 01/5 | 56418590 | Aircap 78 |
| 01/6 | 56418564 | Aircap XT01 B |
| 01/7 | 56418571 | Aircap 765 |
| 01/8 | 56418576 | Aircap 777 |
| 01/9 | 56418572 | Aircap 3030 |
| 01/10 | 56418566 | Aircap XT03 |
| 01/11 | 56418702 | Aircap Super VIT |
| 02/1 | 10011252 | Kit nozzle + needle 1.00 Serie 41 |
| 02/2 | 10011253 | Kit nozzle + needle 1.20 Serie 41 |
| 02/3 | 10011122 | Kit nozzle + needle 1.40 Serie 41 |
| 02/4 | 10011123 | Kit nozzle + needle 1.60 Serie 41 |
| 02/5 | 10011124 | Kit nozzle + needle 1.80 Serie 41 |
| 02/6 | 10010129 | Kit nozzle + needle 1.20 C.T. Serie 41 |
| 02/7 | 10010130 | Kit nozzle + needle 1.40 C.T. Serie 41 |
| 02/8 | 10010131 | Kit nozzle + needle 1.50 C.T. Serie 41 |
| 02/9 | 10010132 | Kit nozzle + needle 1.80 C.T. Serie 41 |
| 02/10 | 10010133 | Kit nozzle + needle 2.20 C.T. Serie 41 |
| 02/11 | 10010135 | Kit nozzle + needle 2.50 C.T. Serie 41 |
| 02/12 | 10010134 | Kit nozzle + needle 2.80 C.T. Serie 41 |

## SPARE PARTS — X 4100 Series Pressure

| No. | Code | Description |
|---|---|---|
| 03 | 51910607 | Bushing |
| 04 | 56418439 | Kit screw + trigger shaft (long) |
| 05 | 56418443 | Trigger kit |
| **06** | **56411616** | **Complete packing nut Kit** |
| 07 | 56415252 | Air flow / Fan regulator |
| **08** | **56418494** | **Air valve washer** |
| 09 | 54110012 | Air valve seating |
| 10 | 54710312 | Conical spring 10.6 x 6.7 x 29 x 1.05 |
| 11 | 56418669 | Air valve Kit |
| **12** | **56411623** | **Product needle guide box** |
| 13 | 56410044 | Spring kit |
| 14 | 57810340 | Product Regulator wheel |
| 15 | 50210214 | Air valve assembly key |
| 16/1 | 56418054 | Product filter 60 mesh (10 units) |
| 16/2 | 56418053 | Product filter 100 mesh (10 units) |
| 17 | 56418057 | Filter holder kit (1/4”-3/8”) + mesh filter |
| 18 | 56418670 | Product tube |
| 19 | 56410110 | Swivel coupling BSP 1/4” M - BSP 1/2” F |
| 20 | 56418671 | Tube + swivel coupling Kit |
| 21 | 56418681 | Gasket nozzle Kit |
| 22 | 56418678 | Gasket washer (5 units) |

***This exploded view is not the material list of the spraygun***

***Clean the spraygun correctly. No metal tools. Only brushes. Lubricate the moving parts of the gun after each cleaning.***

**Cleaning kit** Brush and sticks for optimum cleaning outside and inside the gun.

**Code** 40000086

**Lubricant grease** Natural grease. High consistency, even under extreme temperatures. Long lasting, it doesn’t lose properties over the time. 100 ml. can.

**Code** 56418589

(see page 105)

# 3300 GTO Suction / Pressure

**Ideal for painting large surfaces, machinery and industrial vehicles**

**Continuous working days**

# Versatility Industrial finishes

**With the 3300 GTO suction spraygun, SAGOLA offers a very high level product with an excellent quality / price ratio. This suction spraygun is characterized by its versatility.**

**High performance spraygun. High speed application for painting large surfaces. Offers large fan sizes.**

**Ideal for the application of enamels, varnishes, primers and basecoats.**

**High-end aluminum aircaps. Nozzles and needles made of stainless steel.**

| TECHNICAL DATA | 3300 GTO SUCTION / PRESSURE | |
|---|---|---|
| Weight with cup: (suction version) | 869 grams | 1.92 lbs |
| Weight without cup: (suction/pressure version) | 474 grams | 1.04 lbs |
| Dimensions with cup: (suction version) | 18.7 X 10.6 X 28.7 cm. | 7.36 x 4.17 x 11.31 “ |
| Dimensions without cup: (suction/pressure version) | 17.8 X 1.9 X 17.5 cm. | 7.01 x 0.75 x 6.91 “ |
| Air inlet connection | BSP 1/4” Male | |
| Cup | Suction: 1,000 ml. cup capacity (34 fl oz.) Cup with anti-drip system<br>Pressure: Product input through pressure pot or pneumatic pump | |
| Product filter | Nylon mesh (Suction) | |
| Recommended working pressure (suction version) | 2 - 3 bar (29 - 43.5 psi) | |
| Average sound pressure level | 80 dB | |
| Materials in contact with the product | Anodized aluminum, chromed aluminum, POM, Stainless steel and Teflon | |

# 3300 GTO Suction / Pressure

## Body

**Chromed and forged aluminum body. Light spraygun but with great robustness.**

## Quality / price ratio

**High-level manufacturing spraygun with high performance at a low cost.**

## Aircaps

**Aluminum aircaps available in EPA and HVLP. Very low air consumption.**

## Cup

**High capacity aluminum deposit (1L).**

# 3300 GTO Suction/Pressure

## Spraygun main news

**01 SUPER LIGHT. -METAL TO METAL- TECHNOLOGY.**
No sealing joints between components.

**02 High strength FORGED ALUMINUM BODY.**
REGISTER DC 924667-0004 DESIGN REGISTER.

**03 NEW ALUMINUM AIRCAPS.**
GTO HVLP / 3300 EPA
Ultra-fine atomization and larger fans. Designed for the best response at any pressure. With mechanized aerodynamic caps which eliminate turbulence and reverse painting.

**04 One single piece AUTOMATIC PAINT PACKING GLAND.**
Unique in the market. It avoids manipulation and breakage of the glands and makes it easier to remove for the thorough cleaning of the paint area.

**05 ERGONOMIC TRIGGER.**
Made of stainless steel.
It reduces fatigue.

**06 NOZZLE AND NEEDLE.**
Made of stainless steel.

**07 SINGLE SHAFT SYSTEM.**
Directly continuing Xtreme model series with a simplified design, synchronized performance in any kind of situation, fewer parts, and maintenance reduction.

**08 HIGH PRECISION AIR INLET REGULATOR.** Modern design without sharp edges, it makes easier cleaning.
Higher control precision. Ideal for quick adjustment.

**09 AIR FLOW REGULATOR with PRESSURE GAUGE.**
It maintains the working pressure according to the parameters of Emissions regulations. (Green scale). Code 40000335

**10 1L SUCTION DEPOSIT.**
made of aluminum. Maximum use of the product. Watertight system with double closure and anti-drip lid.

**Suction Version**

# 3300 GTO Suction/Pressure

## 3300 GTO aircaps technical data / Versions

**3300 EPA Aircap.** Versatility and perfect adaptation to any type of industrial painting project. High gloss finishes, primers and high viscosity paints. Its sustained air consumption, together with the high percentages of product transfer, make SAGOLA's EPA aircaps the most balanced system on the market.

EPA PAINTED SYSTEM

| Recommended application | Recommended nozzle | Aircap | Product output flow | Fan size | Application distance | Code Spraygun |
|---|---|---|---|---|---|---|
| HIGH QUALITY FINISHES | 1.40 | 3300 EPA | 179 g/min. (6.3 oz/min.) | 245 mm. (9.6") | 18 - 20 cm. (7 - 7.9") | 10120910 |
| GENERAL FINISHES | 1.60 | 3300 EPA | 156 g/min. (5.5 oz/min.) | 225 mm. (8.9") | | 10120911 |
| FINISHES AND PRIMERS | 1.80 | 3300 EPA | 184 g/min. (6.5 oz/min.) | 245 mm. (9.6") | | 10120912 |

**Air consumption at 2 bar (29 psi): 250 L/min. (8.8 cfm)**

**Recommended pressure: 2.0 - 2.5 bar (29 - 36 psi)**

EPA PAINTED SYSTEM

| Recommended application | Recommended nozzle | Aircap | Air consumption at 2 bar | Recommended pressure | Application distance | Code Spraygun |
|---|---|---|---|---|---|---|
| HIGH QUALITY FINISHES | 1.00 | 3300 EPA | 250 L/min. (8.8 cfm) | 1,5 - 2,0 bar (21.7 - 29 psi) | 18 - 20 cm. (7 - 7.9") | 10152214 |
| GENERAL FINISHES PRIMERS | 1.20 | 3300 EPA | 250 L/min. (8.8 cfm) | 1,5 - 2,0 bar (21.7 - 29 psi) | | 10152215 |
| PRIMERS | 1.40 | 3300 EPA | 250 L/min. (8.8 cfm) | 1,5 - 2,0 bar (21.7 - 29 psi) | | 10152216 |

**3300 HVLP Aircap.** Sagola HVLP System. Large fan size. Low pressure aircap to paint closer to the part and increase the transfer rate. Smooth and uniform finish to save time and consumables in the sanding process. Reduction of spray mist (overspray).

HVLP PAINTED SYSTEM

| Recommended application | Recommended nozzle | Aircap | Air consumption at 2 bar | Recommended pressure | Application distance | Code Spraygun |
|---|---|---|---|---|---|---|
| FINISHES. BASECOATS. DYES | 1.00 | GTO HVLP | 360 L/min. (12.71 cfm) | 1.8 - 2.0 bar (26,1 - 29 psi) | 18 - 20 cm. (7 - 7.9") | 10152210 |
| GENERAL FINISHES PRIMERS | 1.20 | GTO HVLP | 360 L/min. (12.71 cfm) | 1.8 - 2.0 bar (26,1 - 29 psi) | | 10152211 |
| PRIMERS AND BASECOATS | 1.40 | GTO HVLP | 360 L/min. (12.71 cfm) | 1.8 - 2.0 bar (26.1 - 29 psi) | | 10152212 |

Both the **product contribution** and the **fan size** in the pressure guns are directly related to the product pressure set by the user, the product viscosity and the characteristics of the hose. Therefore, a reference value cannot be established.

# 3300 GTO Suction

## 3300 GTO Suction Spare parts

The Sagola 3300 GTO Suction is covered by a **3-year** manufacturers warranty from SAGOLA.
Please follow the recommended housekeeping and maintenance procedure as prescribed in the operation manuals.

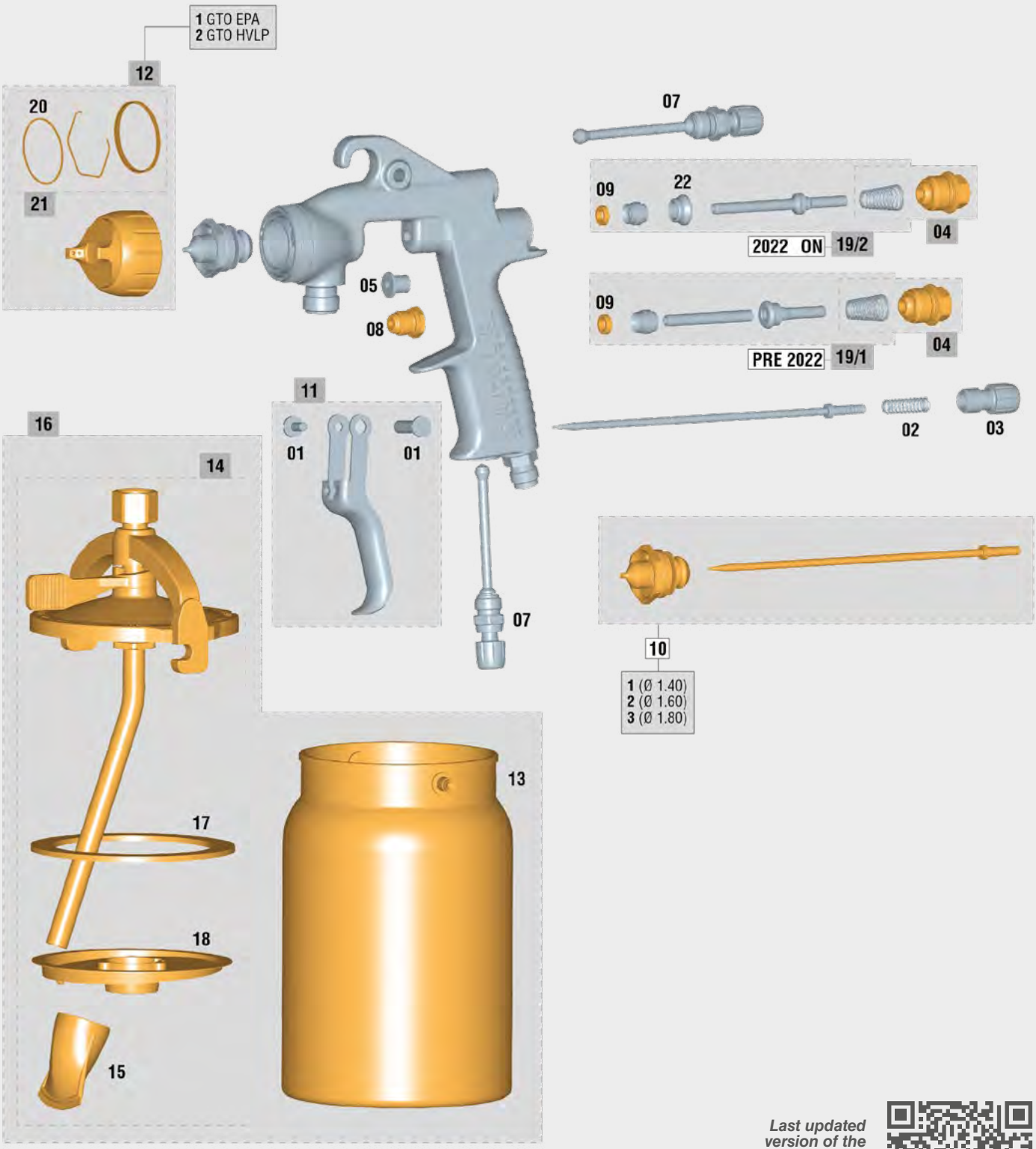


*Last updated version of the exploded view*

# 3300 GTO Suction

We call critical parts those that can stop the work of a spraygun: wear parts, gaskets, packings,... Sagola sprayguns design offers **ONLY 6 CRITICAL PARTS ( )**. Only 6 references in store to provide a 100% effective after-sales service.

## SPARE PARTS — 3300 GTO Suction

| No. | Code | Description |
|---|---|---|
| 01 | 56418429 | Kit screw + trigger shaft (short) |
| 02 | 56410072 | Spring kit |
| 03 | 57810342 | Product regulator wheel (black) |
| **04** | **56418701** | **Product needle guide box + spring** |
| 05 | 51910608 | Bushing |
| 07 | 56415254 | Air flow regulator |
| **08** | **57212211** | **Complete packing nut Kit** |
| **09** | **56418494** | **Air valve washer (6 units)** |
| **10/1** | **10011181** | **Kit nozzle + needle 1.40 Serie 3300 Pro** |
| **10/2** | **10011182** | **Kit nozzle + needle 1.60 Serie 3300 Pro** |
| **10/3** | **10011183** | **Kit nozzle + needle 1.60 Serie 3300 Pro** |

## SPARE PARTS — 3300 GTO Suction

| No. | Code | Description |
|---|---|---|
| 11 | 56418637 | Trigger kit |
| **12/1** | **56418645** | **Aircap 3300 EPA** |
| **12/2** | **56418658** | **Aircap 3300 HVLP** |
| 13 | 56412320 | 1L Suction cup |
| 14 | 56416402 | 1L Suction cup lid flange |
| 15 | 56418014 | Product filter (10 units) |
| **16** | **56416402** | **1L Suction cup Kit** |
| 17 | 56418509 | Cup closure flanged washer (5 units) |
| 18 | 56418013 | Anti-drip lid (5 units) |
| 19 | 56418664 | Air valve Kit |
| 20 | 56418682 | Gasket washer (5 units) |
| 21 | 56418679 | Gasket nozzle Kit |

***This exploded view is not the material list of the spraygun***

***Clean the spraygun correctly. No metal tools. Only brushes. Lubricate the moving parts of the gun after each cleaning.***

**Cleaning kit** Brush and sticks for optimum cleaning outside and inside the gun.

**Code** 40000086

**Lubricant grease** Natural grease. High consistency, even under extreme temperatures. Long lasting, it doesn't lose properties over the time. 100 ml. can.

**Code** 56418589

(see page 105)

# 3300 GTO Pressure

## 3300 GTO Pressure Spare parts

The Sagola 3300 GTO Pressure is covered by a **3-year** manufacturers warranty from SAGOLA.
Please follow the recommended housekeeping and maintenance procedure as prescribed in the operation manuals.

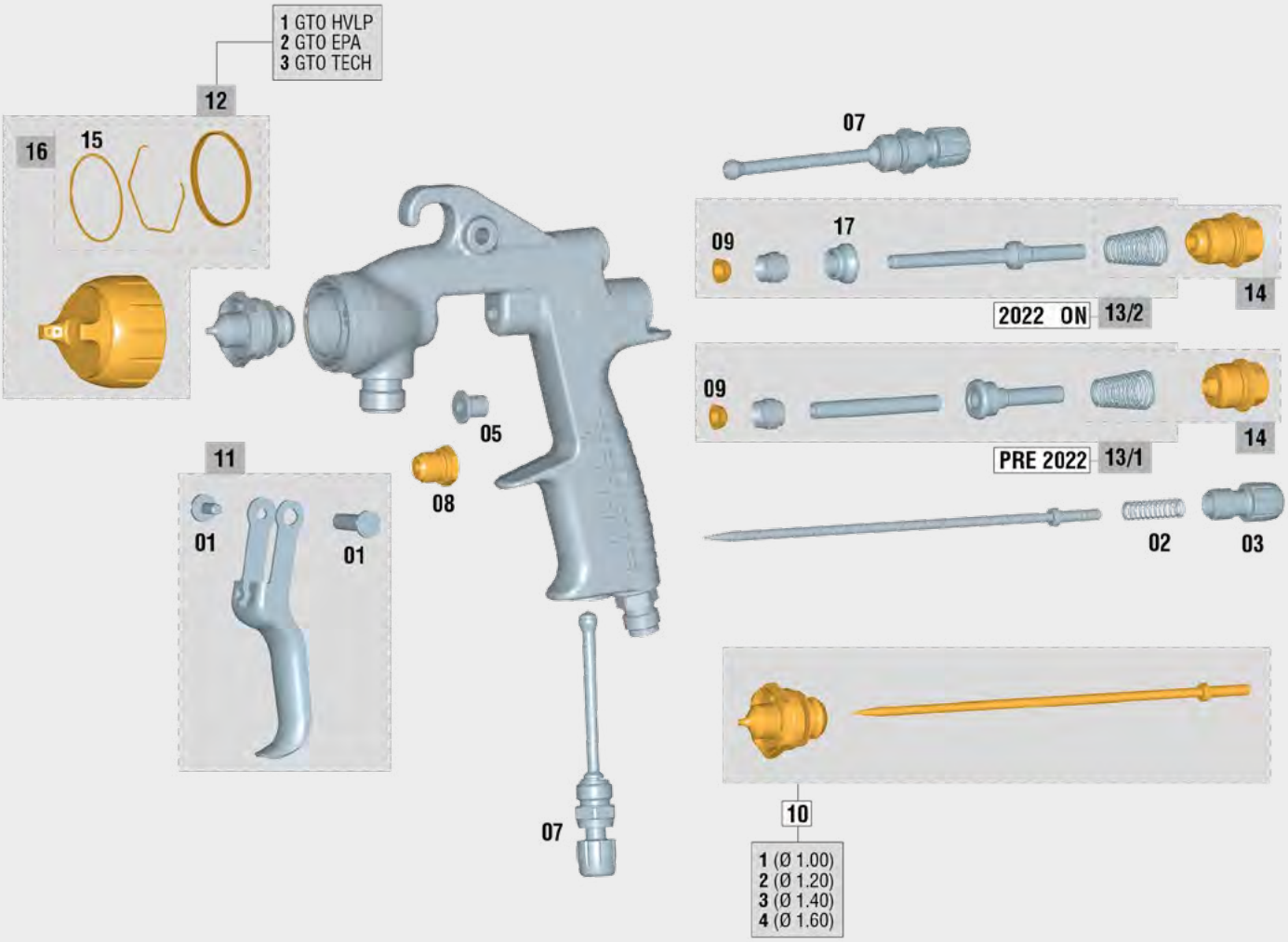


*Last updated version of the exploded view*

# 3300 GTO Pressure

We call critical parts those that can stop the work of a spraygun: wear parts, gaskets, packings,... Sagola sprayguns design offers **ONLY 5 CRITICAL PARTS (  )**. Only 5 references in store to provide a 100% effective after-sales service.

## SPARE PARTS — 3300 GTO Pressure

| No. | Code | Description |
|---|---|---|
| 01 | 56418429 | Kit screw + trigger shaft (short) |
| 02 | 56410072 | Spring kit |
| 03 | 57810342 | Product regulator wheel (black) |
| 05 | 51910608 | Bushing |
| 07 | 56415254 | Air flow regulator |
| **08** | **57212211** | **Complete packing nut Kit** |
| **09** | **56418494** | **Air valve washer (6 units)** |
| **10/1** | **10011187** | **Kit nozzle + needle Ø 1.00 Serie 3300 Pro** |
| **10/2** | **10011180** | **Kit nozzle + needle Ø 1.20 Serie 3300 Pro** |
| **10/3** | **10011181** | **Kit nozzle + needle Ø 1.40 Serie 3300 Pro** |
| **10/4** | **10011182** | **Kit nozzle + needle Ø 1.60 Serie 3300 Pro** |

## SPARE PARTS — 3300 GTO Pressure

| No. | Code | Description |
|---|---|---|
| 11 | 56418637 | Trigger kit |
| **12/1** | **56418477** | **Aircap GTO HVLP** |
| **12/2** | **56418645** | **Aircap GTO EPA** |
| 13 | 56418664 | Air valve Kit |
| **14** | **56418701** | **Product needle guide box + spring** |
| 15 | 56418682 | Gasket washer (5 units) |
| 16 | 56418679 | Gasket nozzle Kit |

*This exploded view is not the material list of the spraygun*

***Clean the spraygun correctly. No metal tools. Only brushes. Lubricate the moving parts of the gun after each cleaning.***

**Cleaning kit** Brush and sticks for optimum cleaning outside and inside the gun.

**Code** 40000086

**Lubricant grease** Natural grease. High consistency, even under extreme temperatures. Long lasting, it doesn't lose properties over the time. 100 ml. can.

**Code** 56418589

(see page 105)

# Mini Xtreme Pressure

**High resistance forged and anodized aluminum body.**

**Ideal for painting chassis and structures.**

**Perfect ERGONOMICS: Due to its size it is the perfect spray gun for retricted access areas which require a lot of wrist movement.**

mini XTREME

# Unlimited possibilities in 347g

**Its compact size makes this gun the perfect choice for working in hard to reach areas. Also suitable for spot repair work or lettering. It reduces mist, saves paint and perfectly defines the work zone.**

**Mini EPA aircap**

**Mini VIT aircap**

**Mini HVLP aircap**

| TECHNICAL DATA | | MINI XTREME PRESSURE |
|---|---|---|
| Weight | 347 grams | 0.765 lbs |
| Dimensions | 15.8 X 1.8 X 16.5 cm. | 6.22 x 0.71 x 6.49 “ |
| Air inlet connection | BSP 1/4” Male | |
| Product intlet connection | BSP 3/8” Male | |
| Deposit | Product input through pressure pot or pneumatic pump | |
| Recommended working pressure | 2 - 3 bar (29 - 43.5 psi) | |
| Average sound pressure level | 80 dB | |
| Materials in contact with the product | Anodized aluminum, POM, Stainless steel, Teflon and Nylon | |

# Mini Xtreme Pressure

## Spraygun main news

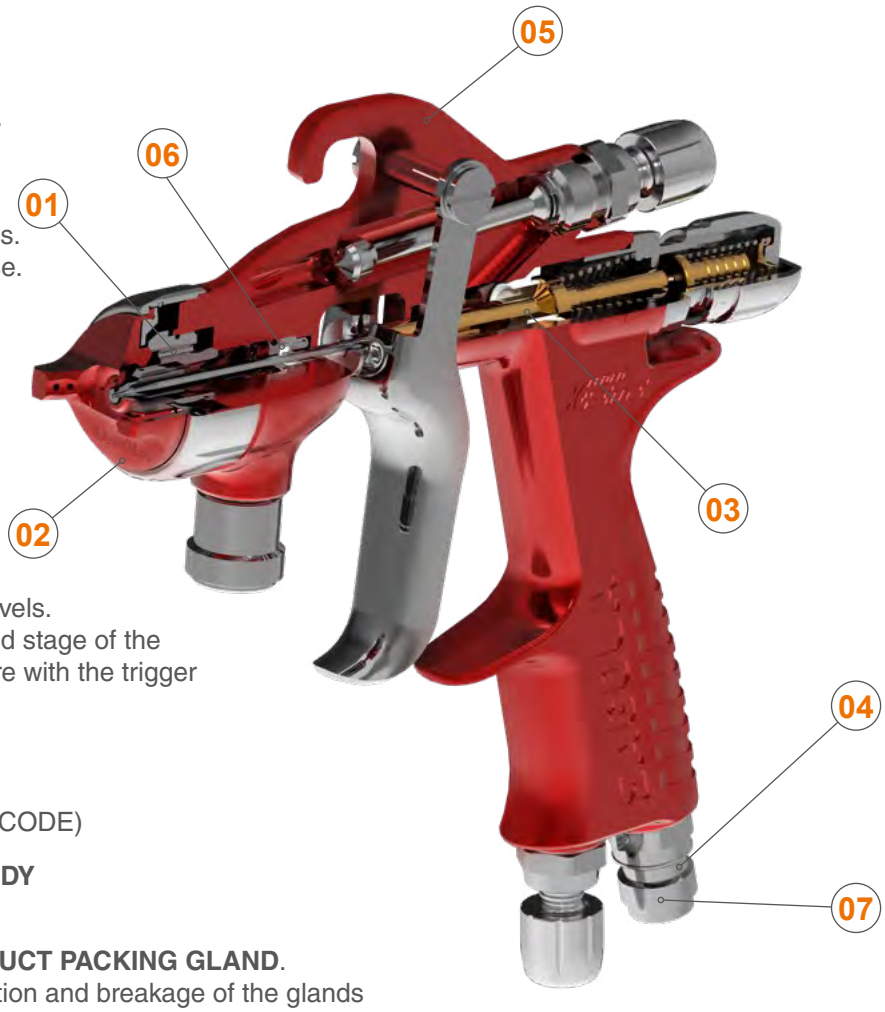


**01 DV NOZZLES**. Made of stainless steel. Maximum application speed.

**02 AIRCAPS** Made of duralumin. Highly resistant and light. EPA and HVLP Systems. Totally interchangeable. 3 aircaps to choose. Each compatible with all available fluid nozzle sizes. High transfer HVLP aircap. Designed under the highest environmental standards. Without pressure reducers in the body of the gun We convert from a conventional system to an HVLP system, only changing the aircap. Two high transfer EPA aircaps.

**03 "SOFT FLOW" AIR VALVE**.
Smooth trigger even at high air pressure levels. No pressure drops between the 1st and 2nd stage of the trigger. Save paint by regulating air pressure with the trigger partially pulled (1st stage).

**04 IDENTIFYING RINGS OF COLOURS**.
Perfect for differentiation spray guns when there are multiple painters. (COLOR CODE)

**05 ANODIZED FORGED ALUMINUM BODY**
High strength in just 347 grams.

**06 One single piece AUTOMATIC PRODUCT PACKING GLAND**.
Made of stainless steel. It avoids manipulation and breakage of the glands and makes easier to remove it for a through cleaning of the paint part.

**07 AIR INLET REGULATOR**.
Modern design without sharp edges, it makes easier cleaning. Higher regulation precision.

**"METAL TO METAL" TECHNOLOGY**.
The high-end mechanisation technology used makes it the only spray gun in the bodywork market that is manufactured without any kind of gasket, interior or exterior, at the closures between the air and paint. Minimum number of spare parts.

### IDENTIFYING RINGS OF COLOURS

### AIR FLOW REGULATOR

The **RC1 pressure regulator**. Hand tighten, no wrench needed. Perfect closing. Without Teflon coating the air inlet of the gun.

(see page 105)

# Mini Xtreme Pressure

## Mini Xtreme aircaps technical data / Versions

**Mini HVLP Aircap.** The use of the Mini HVLP aircap implies a drastic reduction in spray mist and a consequent increase in product transfer. The HVLP aircaps, which work at a lower spray pressure, facilitate the application of metallic colors, obtaining a better alignment of the metallic particle.

HVLP PAINTED SYSTEM

| Recommended application | Recommended nozzle | Aircap | Air consumption at 2 bar | Recommended pressure | Application distance | Code Spraygun |
|---|---|---|---|---|---|---|
| SPECIAL ENAMELS | 0.80 | Mini HVLP | 335 L/min. (11.83 cfm) | 2.0 - 3.0 bar (29 - 43.5 psi) | 12 - 15 cm. (4.72 - 5.9”) | 10111901 |
| FINISHES. LOW MIST | 1.00 | Mini HVLP | 335 L/min. (11.83 cfm) | 2.0 - 3.0 bar (29 - 43.5 psi) | | 10111902 |
| FINISHES AND PRIMERS. MAXIMUM SPEED | 1.20 | Mini HVLP | 335 L/min. (11.83 cfm) | 2.0 - 3.0 bar (29 - 43.5 psi) | | 10111903 |

**Mini EPA / Mini VIT Aircap.** The EPA aircap of the Sagola Mini Xtreme pressure nozzles are characterized by their versatility and their adaptation to any type of industrial painting project. From high gloss finishes to primers and high viscosity paints. Their sustained air consumption, together with the high percentages of product transfer, make SAGOLA’s EPA aircaps the most balanced system on the market.

EPA PAINTED SYSTEM

| Recommended application | Recommended nozzle | Aircap | Air consumption at 2 bar | Recommended pressure | Application distance | Code Spraygun |
|---|---|---|---|---|---|---|
| SHADING. DYES, BASECOATS | 0.80 | Mini EPA | 190 L/min. (6.71 cfm) | 2.0 - 3.0 bar (29 - 43.5 psi) | 18 - 20 cm. (7 - 7.9”) | 10111904 |
| FINISHES. HIGH QUALITY | 1.00 | Mini EPA | 190 L/min. (6.71 cfm) | 2.0 - 3.0 bar (29 - 43.5 psi) | | 10111905 |
| FINISHES. HIGH SPEED | 1.20 | Mini EPA | 190 L/min. (6.71 cfm) | 2.0 - 3.0 bar (29 - 43.5 psi) | | 10111906 |
| DYES AND METALLICS | 0.80 | Mini VIT | 375 L/min. (13.24 cfm) | 2.0 - 3.0 bar (29 - 43.5 psi) | 18 - 20 cm. (7 - 7.9”) | 10111907 |
| FINISHES. HIGHEST QUALITY | 1.00 | Mini VIT | 375 L/min. (13.24 cfm) | 2.0 - 3.0 bar (29 - 43.5 psi) | | 10111908 |
| PRIMERS, BASECOATS | 1.20 | Mini VIT | 375 L/min. (13.24 cfm) | 2.0 - 3.0 bar (29 - 43.5 psi) | | 10111909 |

Both the **product contribution** and the **fan size** in the pressure guns are directly related to the product pressure set by the user, the product viscosity and the characteristics of the hose. Therefore, a reference value cannot be established.

# Mini Xtreme Pressure

## Mini Xtreme Pressure Spare parts

The Sagola Mini Xtreme Pressure is covered by a **3-year** manufacturers warranty from SAGOLA.
Please follow the recommended housekeeping and maintenance procedure as prescribed in the operation manuals.

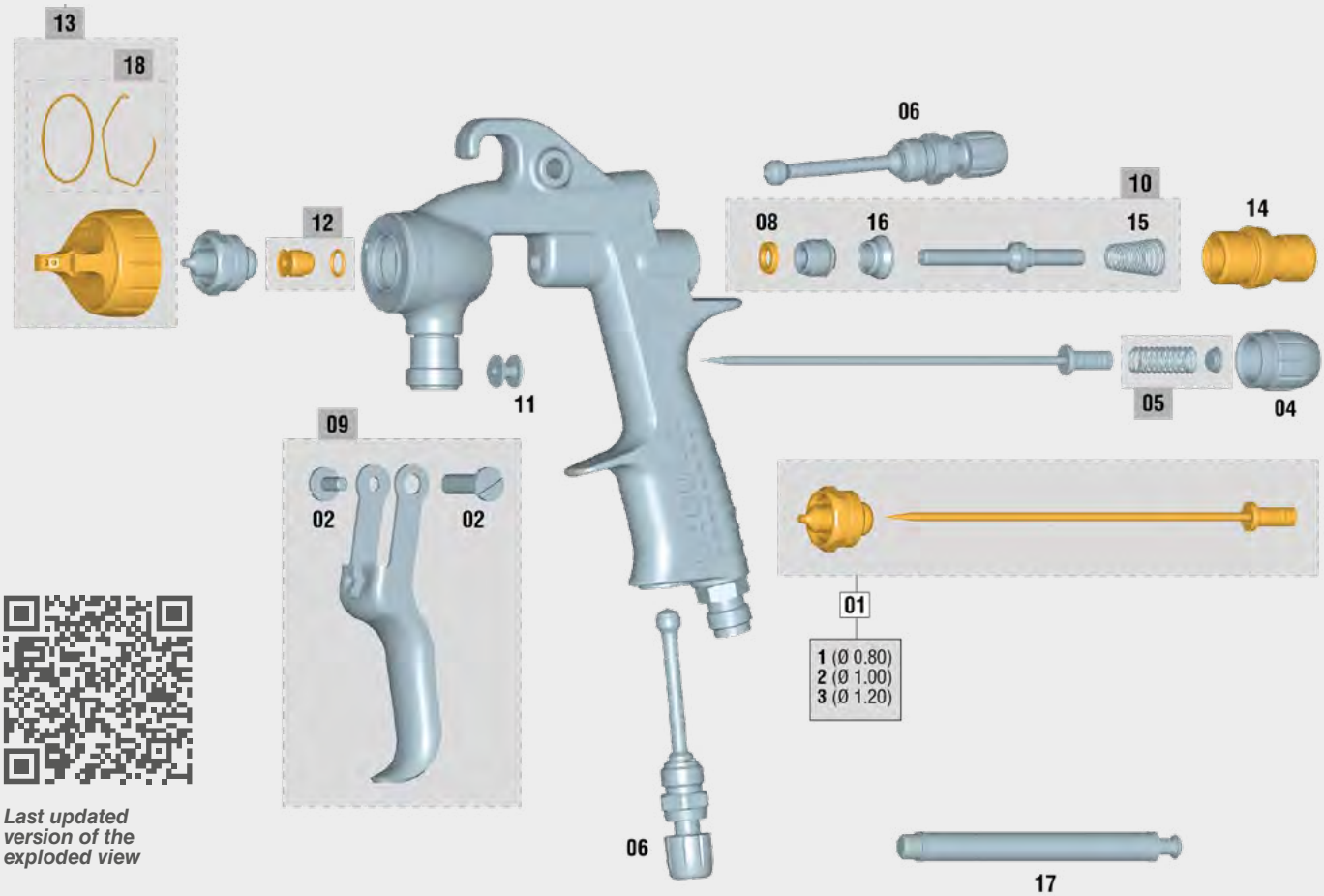


*Last updated version of the exploded view*

We call critical parts those that can stop the work of a spraygun: wear parts, gaskets, packings,... Sagola sprayguns design offers **ONLY 5 CRITICAL PARTS (  )**. Only 5 references in store to provide a 100% effective after-sales service.

**SPARE PARTS** — **Mini Xtreme Pressure**

| No. | Code | Description |
|---|---|---|
| **01/1** | **10011200** | **Kit nozzle + needle 0.80 Serie Mini** |
| **01/2** | **10011201** | **Kit nozzle + needle 1.00 Serie Mini** |
| **01/3** | **10011202** | **Kit nozzle + needle 1.20 Serie Mini** |
| 02 | 56418429 | Kit screw + trigger shaft (short) |
| 04 | 57810340 | Product regulator wheel |
| 05 | 56410043 | Spring Kit |
| 06 | 56415252 | Air flow / Fan regulator |
| **08** | **56418441** | **Air valve washer (6 units)** |
| 09 | 56418637 | Trigger Kit |
| 10 | 56418644 | Air valve Kit |
| 11 | 51910605 | Bushing |

**SPARE PARTS** — **Mini Xtreme Pressure**

| No. | Code | Description |
|---|---|---|
| **12** | **56418034** | **Complete packing nut Kit** |
| **13/1** | **56418526** | **Aircap Mini HVLP** |
| **13/2** | **56418525** | **Aircap Mini EPA** |
| **13/3** | **56418560** | **Aircap Mini VIT** |
| **14** | **56411623** | **Product needle guide box** |
| 15 | 54710312 | Conical spring 10.6 x 6.7 x 29 x 1.05 |
| 16 | 54110012 | Air valve seating |
| 17 | 50210214 | Air valve assembly key |
| 18 | 56418680 | Gasket nozzle Kit |

*This exploded view is not the material list of the spraygun*

# Pressure Pots

**Sagola pressure pots come into their own when pumping equipment demands the maximum durability and minimum maintenance, even with the most abrasive paints (enamels, ceramic and vitro-ceramic clears, cast iron effect, pastes...) or corrosive products (dyes, waterborne paints...).**

## Suitable for any type of paint

Made of aluminum or stainless steel, Sagola's range of pressure pots is suitable for both waterborne and solvent basecoats, abrasive products, high-viscosity primers or fluid dyes. Check our range, there is an ideal configuration for your product.

## Top outlet

Sagola's superior product outlet pressure pots minimize cleaning tasks. Avoid pouring paint into the pressure tank by using one of our interchangeable aluminum tanks or by directly inserting the paint bucket. Simply remove it after painting, and the pressure pot is almost clean.

## Maintenance free

An adequate cleaning process is enough to maintain the Sagola pressure pot. There are no wear parts inside so focus on getting a good finish.

## High-end features

Double high precision regulators, various mixer options: Manual, pneumatic rotary, pneumatic alternative; discharge valve, high quality materials,... Sagola pressure pots are designed and built following the highest quality standards.

## Components for the range of Sagola pressure pots

### Air and product hose

8 x 15 mm. Antistatic air hose and 6 x 8 mm. product hose with Nylon cover.
Light and resistant hose.

| Version | Code |
|---|---|
| 5 m. Air hose + product hose + cover | 56414039 |
| 10 m. Air hose + product hose + cover | 56414040 |
| 15 m. Air hose + product hose + cover | 56414041 |
| 20 m. Air hose + product hose + cover | 56414042 |

# Introduction

Sagola's range of **pressure pots** is the best option for large surface projects where a good balance between application speed, finish quality and easy cleaning is required.

Made of stainless steel or aluminum with high-precision regulators, several mixer options (manual, pneumatic...) and superior product outlet; an extremely easy system to clean and maintain.

Versions in 2.5 and 10 liters of capacity. Increase your productivity and save time by not having to refill the gun deposit.

## Pressure pots main news

**01 TANK OR DEPOSIT** made of Stainless Steel or Aluminum.
Very robust and easy to clean.

**02 TANK LID** made of Stainless Steel or Aluminum.
High quality sealing to prevent leaks.

**03 PRODUCT OUTLET VALVE**.
Ball valve to open or close the product outlet.

**04 MANUAL PRODUCT MIXER**. (Optional)
Mixer for homogenization of the product.

**05 AIR INLET**.
Air inlet of 1/4".

**06 SPRAYGUN PRESSURE REGULATOR**.
Precise control of gun pressure.

**07 POT PRESSURE REGULATOR**.
High quality gauge.

**08 DISCHARGE VALVE**. Pressure release valve.

**09 CLAMPS**. Very robust clamps for closing the pot.

**10 MIXER BLADES**. (Optional)

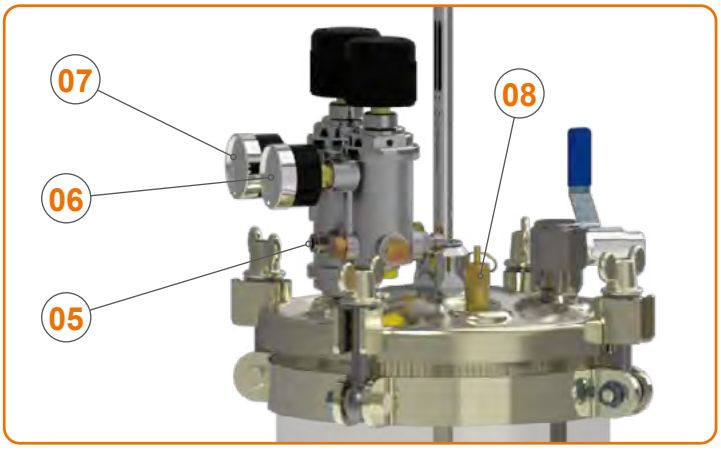

# Sagola 6110 Inox

The range of SAGOLA pressure pots is characterized by its simple handling and minimal maintenance to provide a great service to professional painting.

Maximum quality of finishes for industrial vehicles painting industries.

The 6110 Inox pressure pot is made of Stainless Steel, being a very robust product.

The tank capacity is 10 liters. Includes manual product mixer or pneumatic mixer. The product outlet is in the upper area of the pot.

Double, high precision, robust regulators with discharge valve.

Valid for waterborne and solvent-based paints. Ideal for Industrial Bodyshop and Nautical Sports.

**REGULATIONS:**
SPAIN: AP 1070 FBZ 2330
FRANCE: CODAP
GREAT BRITAIN: British standard 1101-1977
GERMANY: A.D. Merkblätter
ATEX Ex 2 II GX

*Sagola 6110 Inox with pneumatic mixer*

## TECHNICAL DATA

| | | 6110 INOX |
|---|---|---|
| Weight | 11.2 Kilograms | 24.7 lbs |
| Dimensions (with mixer) | 20.8 x 20.8 x 68.3 cm. | 8.2 x 8.2 x 26.9 “ |
| Tank capacity | 10 liters | 338.14 fl oz. |
| Maximum air inlet pressure | 4 bar | 58 psi |
| Air inlet connection | BSP 1/4” Male | |
| Product outlet connection | BSP 3/8” Male | |
| Air pressure regulator range | 0 - 8 bar | 0 - 116 psi |
| Product pressure regulator range | 0 - 4 bar | 0 - 58 psi |
| Materials in contact with the product | Stainless steel, POM, NBR and bronze | |

Special pressure spraygun for industrial jobs. High quality finishes. Maximum application speed and productivity.

## VERSIONS / ACCESSORIES

| Description | Code |
|---|---|
| 6110 Inox Pressure Pot (manual mixer) | **10540702** |
| 6110 Inox Pressure Pot (pneumatic mixer) | **10540704** |
| 6110 Inox **Full painting equipment** Includes X 4100 Series 1.20 [XT01 B] pressure spraygun and air and product hose 5 m. (16.4 ft) | **10540799** |
| Interchangeable tank 10 liters made of stainless steel | 52411607 |
| Single-use disposable interchangeable tank. 10 units | 52411607 |

8 x 15 mm. anti-static air hose and 6 x 8 mm. product hose with Nylon cover. Light and resistant hose.

# Sagola 6110 Inox

## 6110 Inox pressure pot Spare parts

The Sagola 6110 Inox pressure pot is covered by a **3-year** manufacturers warranty from SAGOLA.
Please follow the recommended housekeeping and maintenance procedure as prescribed in the operation manuals.

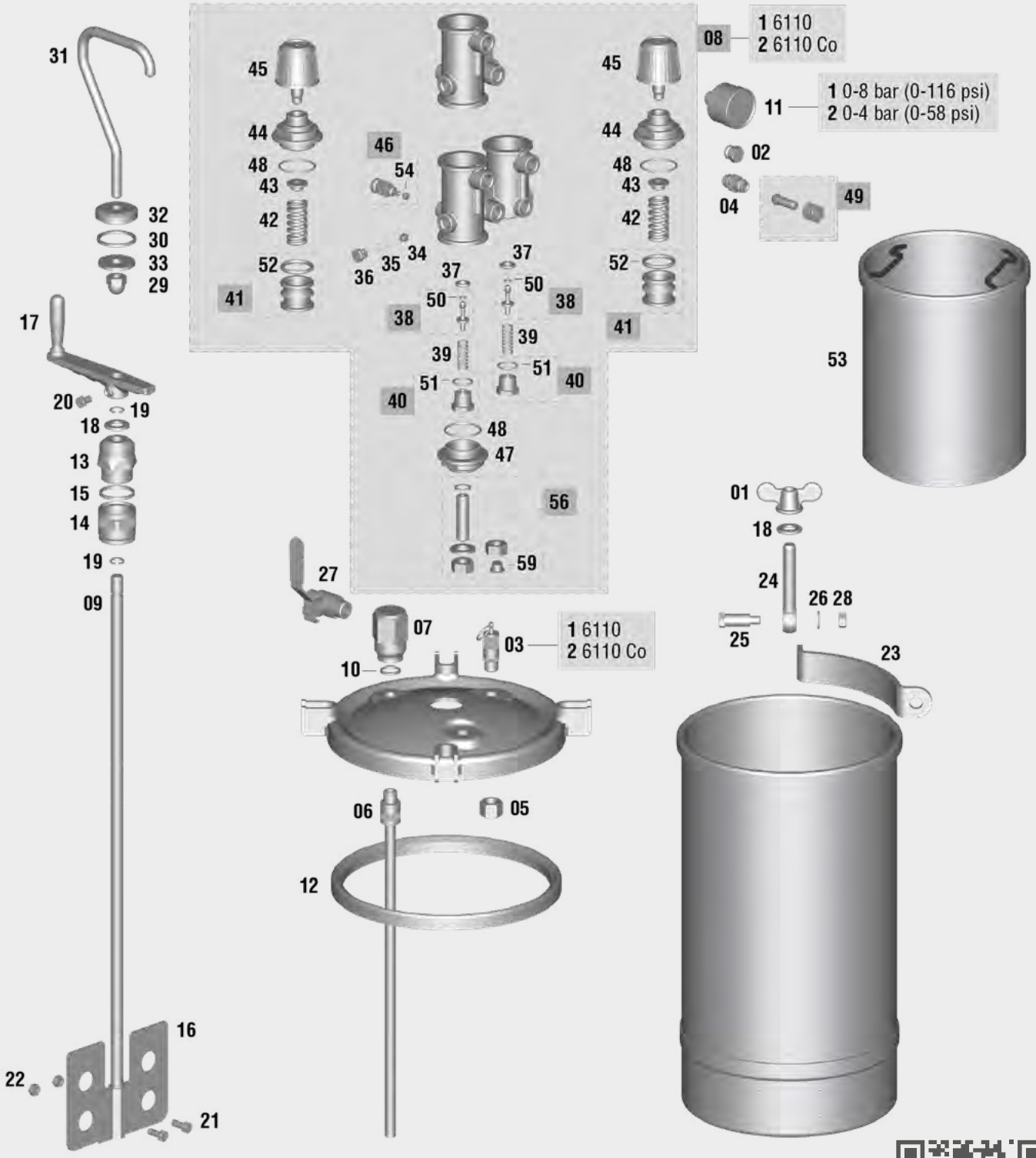


*This exploded view is not the material list of the pressure pot*

*Last updated version of the exploded view*

# Sagola 6110 Inox

SAGOLA is committed to high-quality and service. For this reason SAGOLA provides with a warranty spares service for products supplied over the past 10 years.

## SPARE PARTS 6110 INOX

| No. | Code | Description |
|---|---|---|
| 01 | 54410101 | Pot closing handle |
| 02 | 55712108 | Connection Plug 1/4” x19 M |
| 03/1 | 56456801 | Safety valve 4 bar at 1/4” x19 |
| 03/2 | 57550904 | Safety valve 7 bar at 1/4” x19 |
| 04 | 55710316 | Connection 1/4” x19 M - 1/4” x19 M |
| 05 | 87460505 | Nut 1/4” x19 |
| 06 | 56417131 | Upper outlet tube 10 L |
| 07 | 51610611 | Product outlet head tube |
| 08/1 | 56415109 | Double pressure regulator |
| 08/2 | 56415110 | Single pressure regulator |
| 09 | 53111018 | Agitator shaft |
| 10 | 54210263 | Product output close gasket |
| 11/1 | 54550022 | Gauge 8 1/4” centered back |
| 11/2 | 54550007 | Gauge 8 1/4” centered back |
| 12 | 54210269 | Closing washer |
| 13 | 51910227 | Agitator shaft bushing |
| 14 | 56410068 | Agitator shaft nut |
| 15 | 54210272 | Support closing washer |
| 16 | 50410211 | Sheet agitator blade (stainless steel) |
| 17 | 54410204 | Manual agitator handle |
| 18 | 50850003 | Washer DIN 125 ST Ø13 zinc plated |
| 19 | 50650301 | Elastic ring E-12 |
| 20 | 57251002 | Screw DIN 933 M 6x10 zinc plated |
| 21 | 57251004 | Screw DIN 933 M 6x15 s. steel |
| 22 | 57450905 | Nut DIN 934 M 6x100 s. steel |
| 23 | 51510209 | Pot closing clamp |
| 24 | 53110308 | Clamp screw |
| 25 | 57210016 | Clamp screw shaft |
| 26 | 50850405 | Washer DIN 125 Ø 8.4 zinc plated |
| 27 | 57550110 | Spherical closing valve M/M 3/8" lever |

## SPARE PARTS 6110 INOX

| No. | Code | Description |
|---|---|---|
| 28 | 57450909 | Nut DIN 934 M 8x125 zinc plated |
| 29 | 57451005 | Nut DIN 1587 M 10x150 s. steel |
| 30 | 54210270 | Support Closing washer (6110 Co) |
| 31 | 54410203 | Transport handle (6110 Co) |
| 32 | 51910226 | Lid closing bushing (6110 Co) |
| 33 | 50850018 | Special washer 11 x 35 x 3 s. steel |
| 34 | 57510003 | Regulator anti-return closing valve |
| 35 | 54710215 | Cylindrical spring 6.8 x 12 x 0.3 |
| 36 | 55712159 | Regulator anti-return plug |
| 37 | 50810209 | Regulator closing washer |
| 38 | 56410021 | Pressure regulator end piston |
| 39 | 54710233 | Cylindrical spring 10.8 x 27 x1.2 |
| 40 | 56414906 | Lower cap plug |
| 41 | 56414715 | Air regulator piston |
| 42 | 54710254 | Cylindrical spring 20 x 41 x 3.25 |
| 43 | 51911517 | Regulator spring end bushing |
| 44 | 57411305 | Pressure regulator end nut |
| 45 | 57810327 | Air pressure regulator wheel with shaft |
| 46 | 56415802 | Regulator Exhaust Assembly |
| 47 | 57411208 | Regulator holding nut |
| 48 | 54250975 | Junta tórica 32 x 2 nitrilo |
| 49 | 56414908 | Hose connection 8 mm. + nut 1/4" |
| 50 | 54251001 | O-ring 3.68 x 1.80 viton |
| 51 | 54250939 | O-ring 14 x 2 nitrile |
| 52 | 54251003 | O-ring 24.99 x 3.53 viton |
| 53 | 52411607 | interchangeable tank 10 L (s. steel) |
| 54 | 54210217 | Closing gasket |
| 56 | 56410074 | Regulator coupling kit |
| 59 | 53610201 | Porous bronze filter |

***Do not use metal tools or objects to clean the Pressure pot***

# Sagola 610

SAGOLA pressure pot with a 10 liters deposit capacity.

Pot body made of steel and aluminum lid. It incorporates a top handle for holding and transporting.

Includes high-precision double regulation with robust pressure gauges. Pressure discharge valve. Top product output.

Pressure pot valid for the application of medium-low viscosity paints. Valid for solvent based products.

**REGULATIONS:**
2014/68/EU
Certificate Module D1 Nº: 01 202 TVN/Q-05 0113
ASME Sec. VIII Div. I, 2004 Ed.
ISO 9606-1:2012, ISO 15614-1:2004

## TECHNICAL DATA

| | 610 | |
|---|---|---|
| Weight | 12.6 Kilograms | 27.78 lbs |
| Dimensions (with handle) | 25 x 25 x 38.5 cm. | 9.8 x 9.8 x 15.16 “ |
| Tank capacity | 10 liters | 338.14 fl oz. |
| Maximum air inlet pressure | 4 bar | 58 psi |
| Air inlet connection | BSP 1/4” Male | |
| Product inlet connection | BSP 3/8” Male | |
| Air pressure regulator range | 0 - 8 bar | 0 - 116 psi |
| Product pressure regulator range | 0 - 4 bar | 0 - 58 psi |
| Working temperature range | 0 - 50 °C | 32 - 122 °F |
| Materials in contact with the product | Steel, aluminum, POM and Teflon | |

High performance pressure spray gun with large fan size. High application speed. High transfer aircaps.

## VERSIONS

| Description | Code |
|---|---|
| 610 Pressure Pot | **40000273** |
| 610 **Full painting equipment**<br>Includes 3300 GTO 1.40 [EPA] pressure spraygun and air and product hose 5 m. (16.4 ft) | **10540798** |

8 x 15 mm. anti-static air hose and
6 x 8 mm. product hose with Nylon cover.
Light and resistant hose.

# Sagola 612

Small size SAGOLA pressure pot with top handle for easy transport.

Pot body and lid made of aluminum.

Includes pressure regulator with gauge. Pressure discharge valve. Top product output.

Tank capacity is 2.5 liters.

Pressure pot valid for the application of medium-low viscosity paints. Valid for solvent based products.

**REGULATIONS:**
2014/68/UE

## TECHNICAL DATA

| | | 612 |
|---|---|---|
| Weight | 1.8 Kilograms | 4.02 lbs |
| Dimensions (with handle) | 16.5 x 16.5 x 38.5 cm. | 6.5 x 6.5 x 15.16 “ |
| Tank capacity | 2.5 liters | 84.5 fl oz. |
| Maximum air inlet pressure | 3.4 bar | 50 psi |
| Air inlet connection | BSP 1/4” Male | |
| Product inlet connection | BSP 3/8” Male | |
| Air pressure regulator range | 0 - 6 bar | 0 - 80 psi |
| Working temperature range | 0 - 50 °C | 32 - 122 °F |
| Materials in contact with the product | Anodized aluminium, INOX and NBR | |

## VERSIONS

| Description | Code |
|---|---|
| 612 Pressure Pot | **10540801** |
| 612 **Full painting equipment**<br>Includes X 4100 Series 1.20 [XT01 B] pressure spraygun and air and product hose 1.8 m. (5.9 ft) | **10540899** |

Special pressure spraygun for industrial jobs. High quality finishes. Maximum application speed and productivity.

8 x 15 mm. anti-static air hose and 6 x 8 mm. product hose with Nylon cover. Light and resistant hose.

# Sagola 610 / 612

## Sagola 610 / Sagola 612 Spare parts

The Sagola 6110 Inox pressure pot is covered by a **3-year** manufacturers warranty from SAGOLA.
Please follow the recommended housekeeping and maintenance procedure as prescribed in the operation manuals.

SAGOLA is committed to high-quality and service. For this reason SAGOLA provides with a warranty spares service for products supplied over the past 10 years.

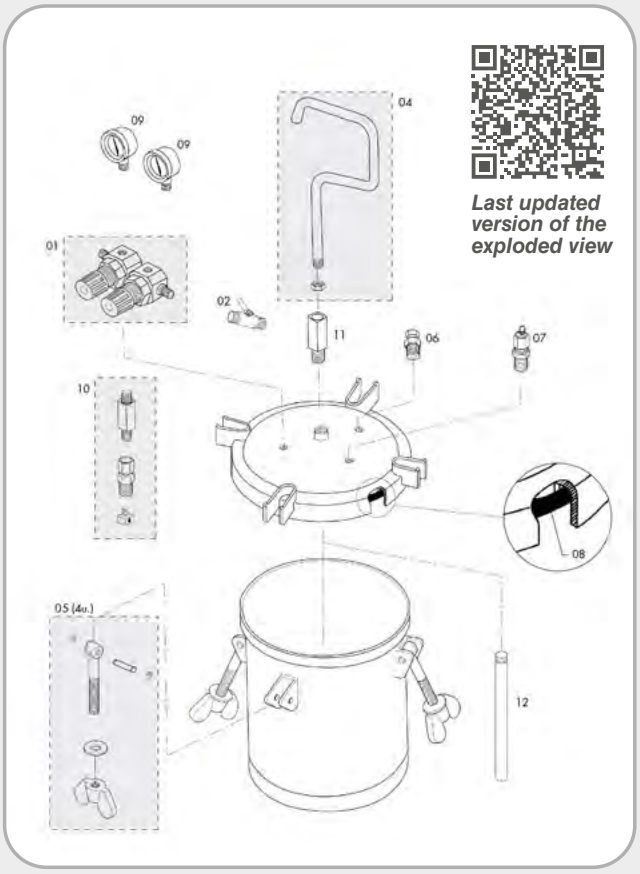

### SPARE PARTS 610

| No. | Code | Description |
|---|---|---|
| 01 | 56410077 | Pressure regulation group |
| 02 | 57550112 | Closing valve 1/4" M - 3/8" M |
| 04 | 56418496 | Transport handle Kit |
| 05 | 56418497 | Pot closing Kit (4 units) |
| 06 | 56417505 | Pressure discharge valve |
| 07 | 56456801 | Safety valve |
| 08 | 54210279 | Pot closing washer |
| 09 | 54550025 | Gauge (bar/psi) 1/4” lateral Ø52 |
| 10 | 56414922 | Regulation group extension plugs Kit |
| 11 | 49000731 | Product oultet tube head |
| 12 | 49000732 | Product oultet tube |

### SPARE PARTS 612

| No. | Code | Description |
|---|---|---|
| 01 | 49000627 | Pot closing washer |
| 02 | 49000628 | Product oultet tube |
| 03 | 49000629 | Pressure discharge valve |
| 04 | 49000630 | Safety pressure valve |
| 05 | 49000631 | Pressure regulator |
| 06 | 54550025 | Gauge (bar/psi) 1/4" lateral Ø52 |
| 07 | 11000101 | Connection 1/4" M-M (2 units) |
| 08 | 56413802 | Product outlet tap 1/4" M - 3/8" M |
| 09/1 | 56418708 | 1.5 m. air + product hose set |
| 09/2 | 56414128 | 1.8 m. air + product hose set |

***Do not use metal tools or objects to clean the Pressure pot***

# Pneumatic Pumps

**High flow. High requirement. Simple handling and low air consumption with high performance.**

## Special versions

Besides the standard versions, we offer two special versions:

Double outlet version: Version with double product outlet for the use of two guns at the same time.

2K paint version: Version with two absorption probes to work with 2K products. (Mix ratio 1:1)

*Special version*
*Double product outlet*

*Special version*
*2k Products*

8 x 15 mm. anti-static air hose and
6 x 8 mm. product hose with Nylon cover.
Light and resistant hose.

## Air and product hose

8 x 15 mm. anti-static air hose and
6 x 8 mm. product hose with Nylon cover.
Light and resistant hose.

| Version | Code |
|---|---|
| 5 m. air + product hose + cover | 56414039 |
| 10 m. air + product hose + cover | 56414040 |
| 15 m. air + product hose + cover | 56414041 |
| 20 m. air + product hose + cover | 56414042 |

## Different settings options

Choose the most suitable version for your jobs:

Chassis: Trolley or wall version

Absorption: Absorption hose or 5L gravity tank.

## Any type of product

Suitable for waterborne or solvent based products... basecoat, transparent lacquers, primers, fillers,...

Any product with any viscosity or density. Special kit for abrasive products.

# Introduction

Sagola's range of **pneumatic double diaphragm pumps** is the best option for those bodywork industries with very demanding jobs.

Free flows of up to 40 L/min. Possibility of working with several guns at the same time.

Ideal for serial work sessions where production can not be stopped to refill a can or a pot.

## Double diaphragm pump main news

**01 ABSORPTION PROBE**.

**02 GRAVITY DEPOSIT** (OPTIONAL).
Optional version Code 30920402.

**03 PRODUCT INLET**.

**04 PRODUCT OUTLET**. 3/8".

**05 AIR PRESSURE REGULATOR** (Pump).

**06 AIR PRESSURE REGULATOR** (Gun).

**07 ANTI-PULSE FILTER**.

**08 PRODUCT PRESSURE REGULATOR**.

**09 PRODUCT RETURN PIPE** (Purge).

**10 PRESSURE GAUGE** (Pump).

**11 PRESSURE GAUGE** (Gun).

**12 AIR INLET TO THE EQUIPMENT**.

**13 TRANSPORT CARRIAGE**.

**14 WALL SUPPORT** (OPTIONAL).

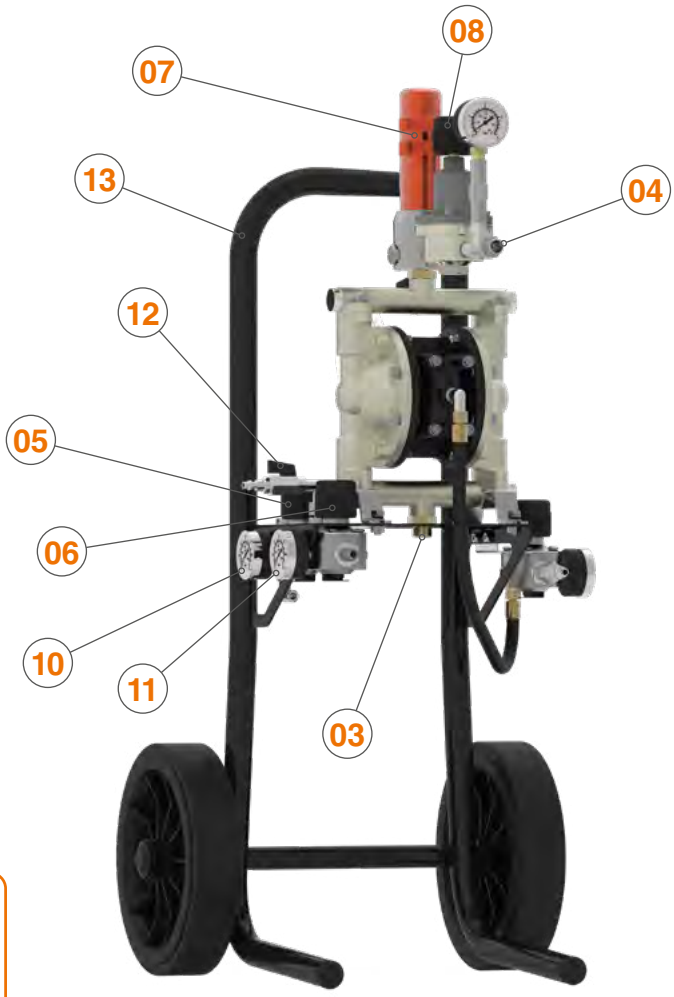

# DM 1/400

Double membrane pneumatic equipment prepared for high productions. It has the capacity to use several pistols at the same time.

It offers easy handling and low air consumption with high performance. Minimum cost and maintenance.

With a flow rate of 40 L/min., it is designed to meet the needs of small metal, plastic, wood and industrial bodyshop industries at the highest level.

Valid for products such as lacquers and varnishes, base-coats, dyes, enamels, primers, fillers, glues,..., in general, medium viscosity products.

**REGULATIONS:**
2006/42/CE
ATEX Ex 2 II GX
UNE-EN-13463-1:2011,
UNE-EN ISO 12100:2012, EN 809,
EN12621, EN12162 and EN 1127-1

*DM 1/400 Gravity deposit version*

## TECHNICAL DATA

| | | DM 1/400 |
|---|---|---|
| Weight (trolley, absorption and regulator) | 18.5 Kilograms | 40.8 lbs |
| Dimensions (trolley, absorption and regulator) | 46.5 x 50.1 x 95.2 cm. | 18.31 x 19.72 x 37.52 “ |
| Maximum air consumption (60 cycles/min.) | 580 L/min. | 20 cfm |
| Maximum air inlet pressure | 7 bar | 102 psi |
| Minimum supply hose Ø | 6 mm. - 1/4” | |
| Free flow (60 cycles/min.) | 40 L/min. | 1.41 cfm |
| Air ilet connection | 1/4” GAS BSP Female | |
| Product outlet connection | 3/8” GAS BSP Male | |

## VERSIONS

| Description | Code |
|---|---|
| Trolley and Absorption probe version (standard) | **30920401** |
| Trolley and Gravity deposit version | **30920402** |
| Wall support and Absorption probe version | **30920406** |
| Wall support and Gravity deposit version | **30920407** |
| DM 1/400 (standard version) **full painting equipment**. Includes X 4100 Series 1.20 [XT01 B] pressure spraygun and and air and product hose 5 m. (16,4 ft) | **30920499** |
| **Abrasive** version. Trolley and Absorption probe | **30920403** |
| **Double outlet** version. Trolley and Absorption probe | **30920404** |

Special pressure spraygun for industrial jobs. High quality finishes. Maximum application speed and productivity.

8 x 15 mm. anti-static air hose and 6 x 8 mm. product hose with Nylon cover. Light and resistant hose.

# DM 1/300

Double diaphragm pneumatic equipment prepared for medium productions.

Easy to use. Reduced cost and maintenance. Very low air consumption.

Flow rate 30 L/min. Designed to meet the needs of small metal, plastic, and wood industries.

Valid for products such as lacquers and varnishes, basecoats, enamels, primers, fillers,..., in general, medium viscosity products.

**REGULATIONS:**
2006/42/CE
ATEX Ex 2 II GX
UNE-EN-13463-1:2011,
UNE-EN ISO 12100:2012, EN 809,
EN12621, EN12162 and EN 1127-1

*DM 1/300 Gravity deposit version*

## TECHNICAL DATA

| | DM 1/300 | |
|---|---|---|
| Weight (trolley, absorption and regulator) | 10.5 Kilograms | 23.15 lbs |
| Dimensions (trolley, absorption and regulator) | 32.4 X 41.5 X 88.0 cm. | 12.76 x 16.35 x 34.65 “ |
| Maximum air consumption (60 cycles/min.) | 380 L/min. | 13 cfm |
| Maximum air inlet pressure | 6 bar | 87 psi |
| Minimum supply hose Ø | 6 mm. - 1/4” | |
| Free flow (60 cycles/min.) | 30 L/min. | 1.06 cfm |
| Air ilet connection | 1/4” GAS BSP Female | |
| Product outlet connection | 3/8” GAS BSP Male | |

## VERSIONS

| Description | Code without product regulator | Code with product regulator |
|---|---|---|
| Trolley and Absorption probe version (standard) | **30920502** | **30920501** |
| Trolley and Gravity deposit version | **30920504** | **30920503** |
| Wall support and Absorption probe version | **30920506** | **30920505** |
| Wall support and Gravity deposit version | **30920508** | **30920507** |
| DM 1/300 (standard version) **full painting equipment**. Includes X 4100 Series 1.20 [XT01 B] pressure spraygun and and air and product hose 5 m. (16,4 ft) | **-** | **30920599** |

Special pressure spraygun for industrial jobs. High quality finishes. Maximum application speed and productivity.

8 x 15 mm. anti-static air hose and 6 x 8 mm. product hose with Nylon cover. Light and resistant hose.

# DM 1/400

## DM 1/400 pneumatic pump Spare parts

The Sagola DM 1/400 pump is covered by a **3-year** manufacturers warranty from SAGOLA.

Please follow the recommended housekeeping and maintenance procedure as prescribed in the operation manuals.

*Last updated version of the exploded view*

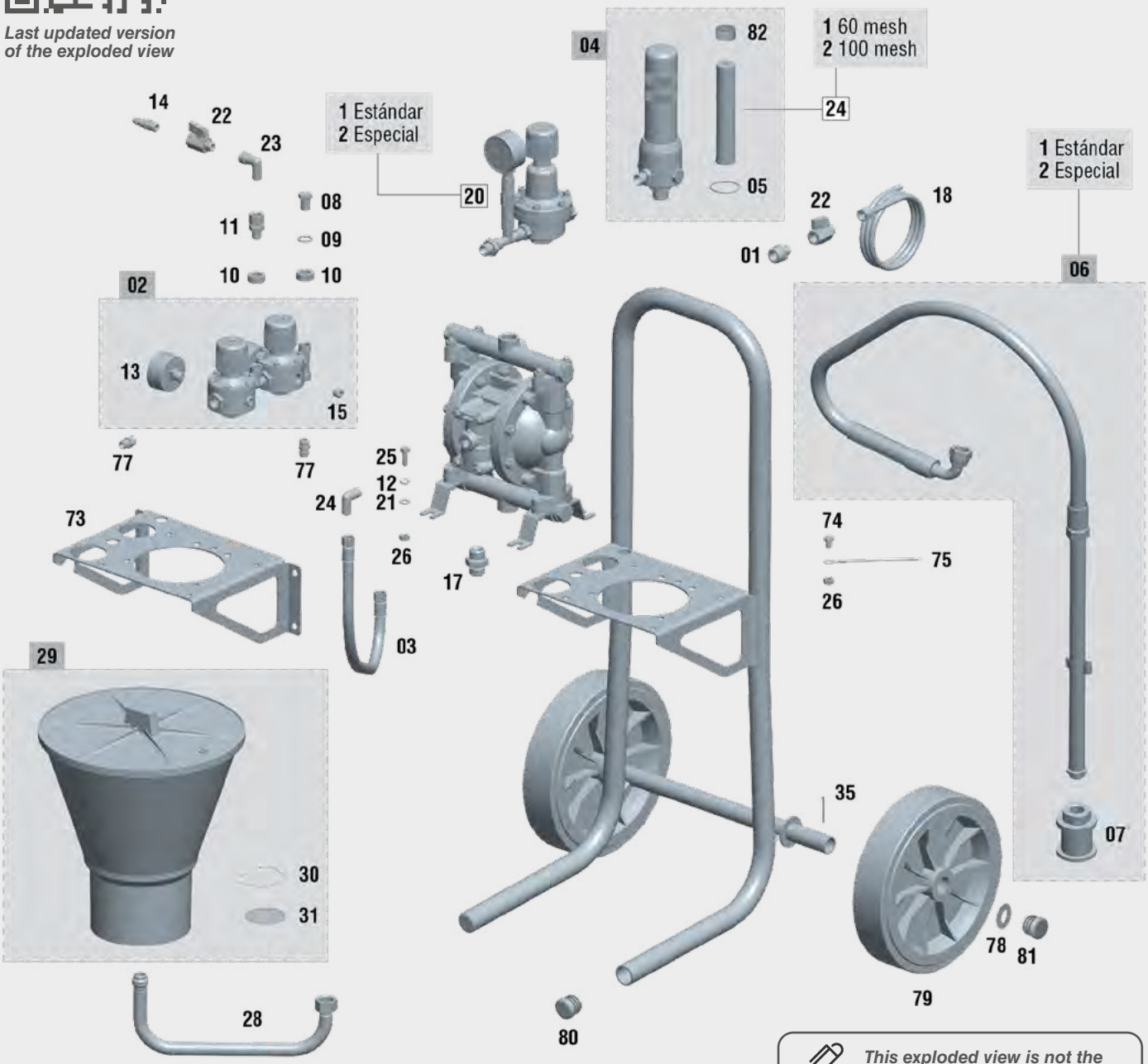


*This exploded view is not the material list of the pump*

# DM 1/400

SAGOLA is committed to high-quality and service. For this reason SAGOLA provides with a warranty spares service for products supplied over the past 10 years.

## SPARE PARTS DM 1/400

| No. | Code | Description |
|---|---|---|
| 01 | 85760201 | Connection 1/2” BSPT - 1/4” BSP |
| 02 | 56410079 | 2 regulators set |
| 03 | 84663812 | Air hose lenght |
| 04 | 83660053 | Anti-pulse set |
| 05 | 54250802 | O-ring 36x3 PTFE |
| 06/1 | 86465206 | Complete absorption probe |
| 06/2 | 86465212 | Absorption probe (Double output) 1.5 m. |
| 07 | 83660047 | Absorption filter 1/2" |
| 08 | 85762125 | Plug 1/4" |
| 09 | 80860036 | Washer Ø20 x Ø14 x 2 (stainless steel) |
| 10 | 80860052 | Guide washer |
| 11 | 85760059 | Connection 1/4" M/H |
| 12 | 50850004 | Washer DIN 7980 Ø 8.1 |
| 13 | 54550016 | Gauge 12 1/4” |
| 14 | 11020420 | Connector BSPT 1/4" M US-mil (2 u.) |
| 15 | 55752117 | Plug 1/4” M DIN 906 (stainless steel) |
| 16 | 56411807 | Pump Trolley |
| 17 | 85760009 | Connection GAS 1/2” M - GAS 1/2” M |
| 18 | 86410082 | Draining hose (1.4 m.) |
| 19/1 | 30910101 | DM 400 Pump |
| 19/2 | 30910102 | DM 400 Pump (abrasives) |
| 20 | 52410019 | Pressure regulator |
| 20 | 86464717 | Pressure regulator (abrasives) |
| 21 | 80860504 | Washer DIN 433 Ø 8.4 zinc plated |
| 22 | 57550106 | Spherical closure valve M-H 1/4" lever |
| 23 | 55750802 | Connection angle 90° 1/4" M - 1/4" F |
| 24 | 55750803 | Connection angle 90° 1/4” M - 1/4” M |
| 25 | 57251011 | Screw DIN 933 M 8x 20 zinc plated |
| 26 | 57450909 | Nut DIN 934 M 8x125 zinc plated |
| 27/1 | 83660030 | Anti-pulse filter 60 mesh |
| 27/2 | 83660029 | Anti-pulse filter 100 mesh |
| 28 | 85760079 | Product deposit connection pipe |
| 29 | 30090091 | Product deposit |
| 30 | 84760004 | Spring |
| 31 | 83660001 | Filter 40 mesh (stainless steel) |
| 32 | 85770033 | Union connection |
| 33 | 86463904 | Regulating membrane set |
| 34/1 | 87560037 | Valve set |
| 34/2 | 87560039 | Valve set (Abrasive version) |
| 35 | 84260894 | O-ring 15.30 x 2.20 |
| 36 | 84260222 | O-ring 14 x 1.50 teflon |
| 37 | 57110202 | Regulator bell shaped |
| 38 | 51911518 | Spring end push bushing |

## SPARE PARTS DM 1/400

| No. | Code | Description |
|---|---|---|
| 39 | 57810341 | Air pressure regulator wheel with shaft |
| 40 | 84560002 | Gauge (bar/psi) 1/4” GAS L |
| 41 | 85760302 | Connection 3/8" M - 1/4" M (s. steel) |
| 42 | 85770043 | Connection 3/8" GAS 395100 |
| 43 | 87260826 | Screw DIN 912 M 6x18 zinc plated |
| 44 | 55752004 | Connector “T” 1/4” x19 nickel plated brass |
| 45 | 85760024 | Connection 1/4” x19 M - 3/8” x19 M |
| 46 | 85762117 | Plug |
| 47 | 85761101 | Connection |
| 48/1 | 30090020 | Valve |
| 48/2 | 30090092 | Valve (abrasives) |
| 49 | 81560009 | Support clamp |
| 50 | 56418581 | Plate + Distributor insert |
| 51 | 87160024 | Distributor lid |
| 52 | 87260027 | Special screw |
| 53/1 | 30090017 | Membrane |
| 53/2 | 30090096 | Membrane (abrasives) |
| 54 | 82960101 | Closing disc |
| 55 | 82960102 | Disc |
| 56 | 30090018 | Kit Shaft + 8 distributor gaskets |
| 57 | 81960601 | Shaft bushing |
| 58 | 81560010 | Clamp |
| 59 | 83160717 | Distributor shaft |
| 60 | 80860069 | End washer |
| 61 | 80660011 | Ring |
| 62 | 86462106 | Side body |
| 63 | 80660303 | Ring DIN 471 E-12 blued |
| 64 | 50650304 | Elastic ring E-20 |
| 65 | 50850402 | Washer DIN 125-B Ø6.4 zinc plated |
| 66 | 85770081 | Reducer 3/8" M - 1/2" H brass |
| 67 | 87261031 | Screw DIN 933 M 8x 20 (s. steel) |
| 68 | 57450904 | Nut DIN 934 M 6x100 zinc plated |
| 69 | 85761902 | Silencer 1/2” |
| 70 | 54250946 | O-ring18.00 x 2.00 nitrile |
| 71 | 30090019 | Distributor Kit |
| 72 | 84760029 | Conical spring |
| 73 | 56418582 | Wall support |
| 74 | 87261030 | Screw DIN 933 M 8x10 zinc plated |
| 75 | 56411419 | Ground connection |
| 77 | 55710316 | Connection 1/4” x19 M - 1/4”x19 M |
| 78 | 85762149 | Black shaft cap of 25 |
| 79 | 86260203 | Fixed wheel Ø 250 shaft 25 |
| 80 | 85762115 | Plug for inner tube 30x1.5 |

# DM 1/300

## DM 1/300 pneumatic pump Spare parts

The Sagola DM 1/300 pump is covered by a **3-year** manufacturers warranty from SAGOLA.

Please follow the recommended housekeeping and maintenance procedure as prescribed in the operation manuals.

*This exploded view is not the material list of the pump*

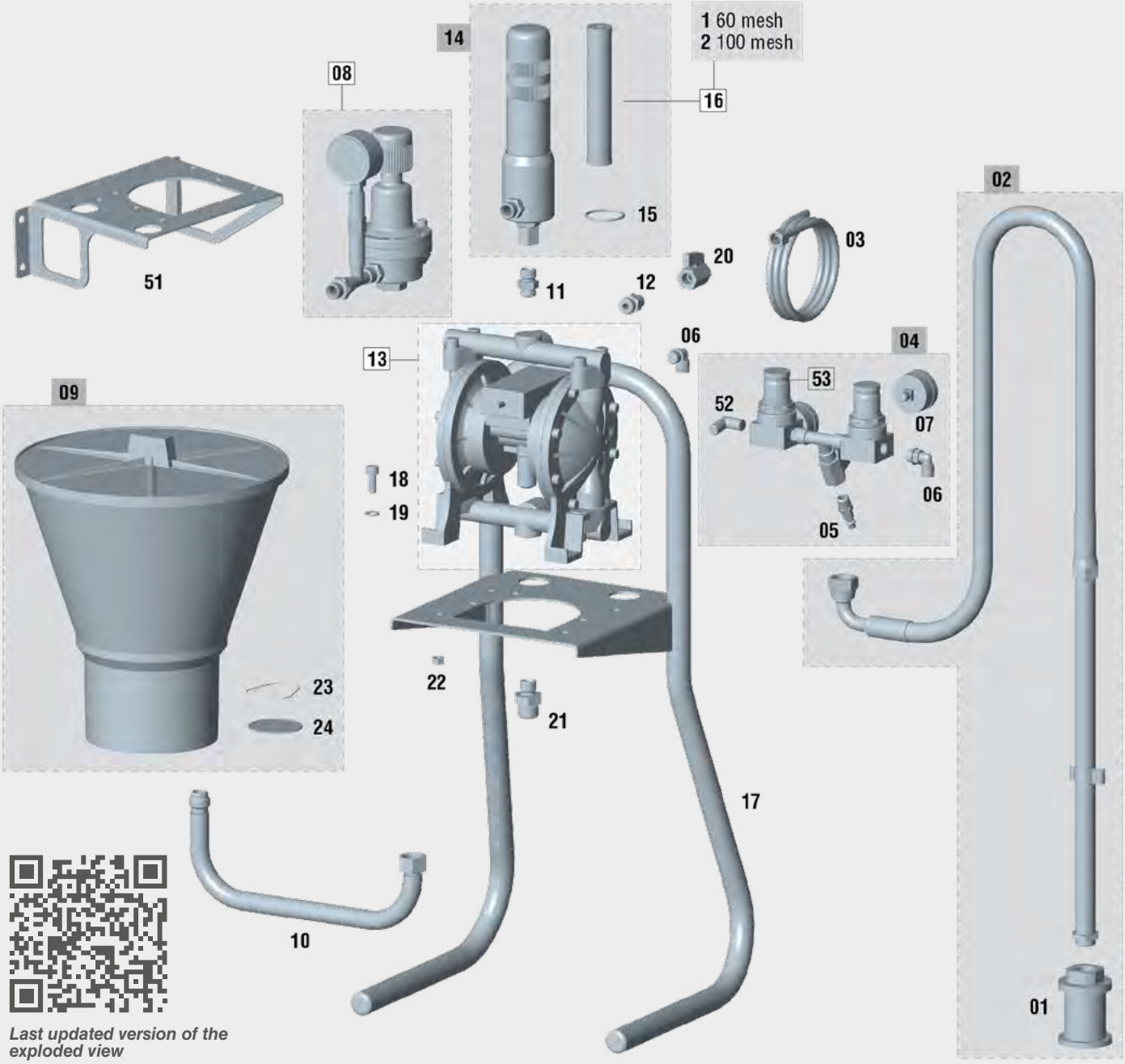


*Last updated version of the exploded view*

# DM 1/300

SAGOLA is committed to high-quality and service. For this reason SAGOLA provides with a warranty spares service for products supplied over the past 10 years.

## SPARE PARTS DM 1/300

| No. | Code | Description |
|---|---|---|
| 1 | 83660047 | Absoption filter 1/2" |
| 2 | 86465206 | Absoption probe |
| 3 | 86410082 | Purge pipe (1.4 m.) |
| 4 | 56410096 | Regulation set |
| 5 | 11020420 | Connector BSPT 1/4" M US-mil (2 u.) |
| 6 | 55751802 | Swivel plug 1/4” M - 8 with washer |
| 7 | 54550009 | Gauge 10 1/8” |
| 8 | 52410019 | Pressure regulator |
| 9 | 30090091 | Product deposit |
| 10 | 85760079 | Product deposit coupling pipe |
| 11 | 85770030 | Connector 3/8” GAS M - 3/8” GAS M |
| 12 | 85760024 | Connector 1/4” x19 M - 3/8” x19 M |
| 13 | 30910105 | DM 300 pump |
| 14 | 56413507 | Anti-pulse set |
| 15 | 54250802 | O-ring 36 x 3 PTFE |
| 16/1 | 83660030 | Anti-pulse filter 60 mesh |
| 16/2 | 83660029 | Anti-pulse filter 100 mesh |
| 17 | 56411806 | Trolley |
| 18 | 87260816 | Screw DIN 912 M 8 x 20 zinc plated |
| 19 | 80860504 | Washer DIN 433 Ø 8.4 zinc plated |
| 20 | 57550106 | Spherical closure valve M-F 1/4" lever |
| 21 | 85760012 | Connection 1/2” GAS M - 3/8” GAS M |
| 22 | 57450909 | Nut DIN 934 M 8 x 125 zinc plated |
| 23 | 84760004 | Spring |
| 24 | 83660001 | Filter 40 mesh (stainless steel) |
| 25 | 84760029 | Conical spring |
| 26 | 85770033 | Union connector |

## SPARE PARTS DM 1/300

| No. | Code | Description |
|---|---|---|
| 27 | 86463904 | Regulation membrane set |
| 28 | 87560037 | Valve set |
| 29 | 84260894 | O-ring 15.30 x 2.20 |
| 30 | 84260895 | O-ring 22.00 x 2.00 |
| 31 | 57110202 | Regulator bell-shaped lid |
| 32 | 51911518 | Spring end-push bushing |
| 33 | 57810341 | Air pressure regulator wheel with shaft |
| 34 | 84560002 | Gauge (bar/psi) 1/4” GAS L |
| 35 | 85760302 | Connector 3/8" M - 1/4" M (s. steel) |
| 36 | 85770043 | Connector 3/8" GAS 395100 |
| 37 | 87260826 | Screw DIN 912 M 6 x 18 zinc plated |
| 38 | 55752004 | Connector “T” 1/4” x19 nickel plated brass |
| 39 | 49000474 | Lateral cover screw (16 units) |
| 40 | 49000475 | Casing screw (8 units) |
| 41 | 49000476 | Lower valve |
| 42 | 49000477 | Upper valve |
| 43 | 49000478 | Membrane |
| 44 | 49000479 | Drive shaft |
| 45 | 49000480 | Distributor shaft |
| 46 | 49000481 | Distributor |
| 47 | 49000482 | Insert + distributor plate |
| 48 | 49000483 | Product outlet connector |
| 49 | 49000484 | Product inlet connector |
| 50 | 49000485 | Silence filter |
| 51 | 56418583 | Wall support |
| 52 | 55750803 | Connection angle 90º 1/4" M - 1/4" M |
| 53 | 57810002 | Regulator knob 1/4" MR BIT |

***Clean the pump correctly. Follow the cleaning steps in the instruction manual for proper operation of the equipment.***

# 3

# Accessories and Application guides

**Service, a key word in SAGOLA's strategic approach to bodyshop.**

**One of our main concerns is to make the painter be able to quickly identify and acquire the main SAGOLA original spare parts - nozzles, needles, aircaps, racks, deposits, regulators...**

**In this section we offer our application guides and our main accessories.**

# Bodyshop sprayguns

## APPLICATION GUIDE
## GRAVITY SPRAYGUN
## BODYSHOP

| | | | MAXIMUM TECHNOLOGY IN FINISHES | | | | | | |
|---|---|---|---|---|---|---|---|---|---|
| | | | Xtrem Finishes | | | | Spot Repair | | |
| | | MODELS | 4600 XTREME | | | | MINI XTREME | | |
| | | AIRCAPS | DVR CLEAR | DVR AQUA | DVR HVLP | DVR TITANIA | MINI EPA | MINI AQUA | MINI HVLP |
| | | System | EPA | EPA | HVLP | EPA | EPA | EPA | HVLP |
| FINISHES | HS CLEARCOATS | Nozzle & Needle | 1.3 | | | 1.3 | 1.2 | | 1.2 |
| | | Air inlet pressure | 2.0 - 2.2 | | | 2.0 - 2.2 | 1.8 - 2.0 | | 1.8 - 2.0 |
| | HS CLEARCOATS | Nozzle & Needle | 1.3 | | | 1.3 | 1.0 - 1.2 | | 1.0 - 1.2 |
| | | Air inlet pressure | 2.0 - 2.2 | | | 2.0 - 2.2 | 1.8 - 2.0 | | 1.8 - 2.0 |
| | EXPRESS DRYING CLEARCOATS | Nozzle & Needle | 1.2 - 1.2 XL | | | 1.2 - 1.2 XL | 1.0 - 1.2 | | |
| | | Air inlet pressure | 2.0 - 2.2 | | | 2.0 - 2.2 | 1.8 - 2.0 | | |
| | WATERBORNE BASECOATS | Nozzle & Needle | | 1.2 - 1.2 XL | 1.2 - 1.3 | | | 1.0 | 1.0 |
| | | Air inlet pressure | | 1.5 - 2.0 | 1.8 - 2.0 | | | 1.0 - 1.5 | 1.0 - 1.5 |
| | SINGLE STAGE | Nozzle & Needle | 1.3 - 1.3 XL | | | 1.3 - 1.3 XL | | | |
| | | Air inlet pressure | 2.0 - 2.4 | | | 2.0 - 2.4 | | | |
| | SOLVENT BASED BASECOATS | Nozzle & Needle | | 1.3 | 1.3 | | | 1.0 | 1.0 |
| | | Air inlet pressure | | 1.5 - 2.0 | 1.8 - 2.0 | | | 1.0 - 1.8 | 1.0 - 1.8 |
| PRIMERS & FILLERS | PRIMERS WET ON WET | Nozzle & Needle | 1.2 - 1.3 XL | | | 1.2 - 1.2 XL | | 1.0 | 1.0 |
| | | Air inlet pressure | 2.0 - 2.2 | | | 2.0 - 2.2 | | 1.0 - 2.0 | 1.8 - 2.0 |
| | PRIMERS SANDING | Nozzle & Needle | | | | | | | |
| | | Air inlet pressure | | | | | | | |
| | FILLERS | Nozzle & Needle | | | | | | | |
| | | Air inlet pressure | | | | | | | |

## APPLICATION GUIDE
## SUCT/PRESS SPRAYGUNS
## BODYSHOP

| | | | industrial vehicles | | | | Fast and Robust | |
|---|---|---|---|---|---|---|---|---|
| | | | X 4100 Series | | | | | |
| | | MODELS | PRESSURE | | | | SUCTION | |
| | | Aircaps | XT03 | XT01 B | 765 | 777 | 96 | XT01 |
| | | System | HVLP | EPA | Conv. | Conv. | Conv. | EPA |
| HIGH GLOSS FINISHES, CLEARCOATS AND SINGLE STAGE PAINTS | | Nozzle & Needle | | 1.0 - 1.2 | 1.2 | 1.0 - 1.2 | 1.6 | 1.6 - 1.8 |
| | | Air inlet pressure | | 2.0 - 2.5 | 3.0 - 3.5 | 3.0 - 3.2 | 2.8 - 3.0 | 2.0 - 2.5 |
| | | Product pressure | | 0.8 - 1.5 | 0.8 - 1.5 | 0.8 - 1.5 | | |
| BASECOATS, METALLIZED | | Nozzle & Needle | 0.8 - 1.0 | 0.8 - 1.0 | | 1.0 | 1.4 - 1.6 | 1.6 |
| | | Air inlet pressure | 2.0 | 2.0 | | 2.5 - 3.0 | 2.5 - 2.8 | 2.0 |
| | | Product pressure | 0.5 - 1.0 | 0.5 - 1.0 | | 0.5 - 1.0 | | |
| INDUSTRIAL FINISHES, ENAMELS, STRUCTURE COATINGS, CHASSIS,... | | Nozzle & Needle | 1.0 - 1.2 | 1.0 - 1.2 | 1.2 | | 1.6 | 1.6 - 1.8 |
| | | Air inlet pressure | 2.0 | 2.0 | 2.5 - 3.0 | | 2.5 - 3.0 | 2.0 |
| | | Product pressure | 1.0 - 1.5 | 1.0 - 1.5 | 1.0 - 1.5 | | | |
| PRIMERS AND FILLERS | | Nozzle & Needle | 1.2 - 1.4 | 1.2 - 1.4 | 1.2 - 1.4 | | 1.6 | 1.6 - 1.8 |
| | | Air inlet pressure | 2.0 | 2.0 | 2.5 - 3.3 | | 2.5 - 3.0 | 2.0 |
| | | Product pressure | 1.2 - 2.0 | 1.5 - 2.0 | 1.5 - 2.0 | | | |

# Bodyshop sprayguns

| Competitive in finishes | PRIMERS AND FILLERS | | | | | | | | | | | | |
|---|---|---|---|---|---|---|---|---|---|---|---|---|---|
| Fast and Robust | | Spot Repair | | | | Light, robust and economical | | | | | | | |
| 3300 GTO CAR | | 3300 GTO | | | | CLASSIC PRO XD | | | | | CLASSIC LUX | | |
| GTO TECH | GTO HVLP | GTO EVO | GTO HVLP | GTO EPA | GTO 62S | HVLP | 21EPA | 25 | 28 | 36 | 40 | 41 | 42 |
| EPA | HVLP | EPA | EPA | HVLP | Conv. | HVLP | EPA | Conv. | Conv. | Conv. | Conv. | Conv. | Conv. |
| 1.4 | | | | | | | | | | | | | |
| 2.0 - 2.2 | | | | | | | | | | | | | |
| 1.3 - 1.4 | | | | | | | | | | | | | |
| 2.0 - 2.2 | | | | | | | | | | | | | |
| 1.3 | | | | | | | | | | | | | |
| 2.0 - 2.4 | | | | | | | | | | | | | |
| 1.2 - 1.3 | 1.3 - 1.4 | | | | | | | | | | | | |
| 1.8 - 2.0 | 2.0 | | | | | | | | | | | | |
| 1.4 | | | | | | | | | | | | | |
| 2.0 - 2.4 | | | | | | | | | | | | | |
| 1.3 - 1.4 | 1.3 - 1.4 | | | | | | | | | | | | |
| 1.8 - 2.0 | 2.0 | | | | | | | | | | | | |
| 1.3 - 1.4 | | 1.3 - 1.4 | | | | | 1.4 | | | | | | |
| 2.0 - 2.2 | | 2.0 - 2.2 | | | | | 2.0 - 2.2 | | | | | | |
| | | | 1.6 - 1.8 | 1.6 - 1.8 | | 1.6 - 1.8 | 1.6 - 1.8 | | | | 1.6 - 1.8 | | |
| | | | 1.8 - 2.0 | 1.8 - 2.0 | | 2.0 | 1.8 - 2.0 | | | | 1.8 - 2.0 | | |
| | | | | | 2.8 | | | 2.0 | 2.5 | 2.5 | | 2.0 | 2.5 |
| | | | | | 2.5 - 3.0 | | | 2.8 - 3.0 | 2.5 - 3.0 | 2.5 - 3.0 | | 2.5 - 3.0 | 2.5 - 3.0 |

# Aircaps

## HVLP (High Volume Low Pressure)

**HVLP technology** was promoted by the US environmental agency in the 1970s with the intention of reducing the excessive cost of painting derived from high-pressure painting.

The basic principle of the system consists in lowering the air pressure in the air nozzle to reduce the spray mist produced by the rebound of the paint against the part, thus reducing the consumption of paint and the emissions of toxic components. environment.

This decrease in air nozzle pressure leads to an increase in air volume that guarantees correct atomization.

| NORMATIVE REQUIREMENTS | HVLP AIRCAP |
|---|---|
| **Minimum Transfer** | No specific requirements |
| FEATURES | |
| **Max. pressure at aircap** | 0.68 bar (10 psi) |
| **Application distance** | Greater product transfer by painting at a shorter distance from the part (12 – 15 cm) |
| **Product output flow** | Lower suction capacity.<br>Product output flow 4600 HVLP at 1.3 to 2 bar pressure: 188 g/min. (6.6 oz/min.) |
| **Air consumption** | High air consumption: 465 L/min (16.4 cfm) 4600 HVLP at 2 bar (29 psi) pressure. |
| **APPLICATION** | PRIMERS AND BASECOATS |

## EPA (Enviromental Protection Agency)

The US environmental protection agency establishes, through the “Clean Air Act”, a series of regulations focused on reducing emissions of toxic particles into the environment.

Part of the regulations, regulates the characteristics and regulations of professional painting equipment.

| NORMATIVE REQUIREMENTS | EPA AIRCAP |
|---|---|
| **Minimum Transfer** | 65% |
| FEATURES | |
| **Max. pressure at aircap** | No specific requirements |
| **Product output flow** | Lower suction capacity.<br>Product output flow 4600 HVLP at 1.3 to 2 bar pressure: 215 g/min. (7.6 oz/min.) |
| **Air consumption** | Regular air consumption: 280 L/min (9.88 cfm) 4600 AQUA at 2 bar (29 psi) pressure. |
| **APPLICATION** | PRIMERS, SINGLE STAGE, BASECOATS AND CLEARCOATS |

## Medium pressure

These are aircaps that are not governed by any specific regulations. This does not mean that they are inferior to the rest in terms of transfer, suction or finish capacity.

Simply that its design is not regulated by any specific regulations.

| NORMATIVE REQUIREMENTS | MEDIUM PRESSURE AIRCAP |
|---|---|
| **Minimum Transfer** | No specific requirements |
| FEATURES | |
| **Max. pressure at aircap** | No specific requirements |
| **Product output flow** | Higher air pressure at the nozzle. Versatile. Suitable for working at high pressures. |
| **Air consumption** | Low air consumption: 240 L/min (8.5 cfm) in 96+ aircap at 2 bar (29 psi) pressure. |
| **APPLICATION** | PRIMERS, SINGLE STAGE, BASECOATS AND CLEARCOATS |

# Aircaps

| SAGOLA SPRAYGUNS | PAINTING SYSTEM | | | | | | | |
|---|---|---|---|---|---|---|---|---|
| | EPA SYSTEM | | | HVLP SYSTEM | | MEDIUM PRESSURE SYSTEM | | |
| 4600 Xtreme | DVR AQUA | DVR CLEAR | DVR TITANIA PRO | DVR HVLP | | | | |
| 3300 GTO | GTO EPA | GTO EVO | GTO TECH | GTO HVLP | | 3300 62S | 3300 64S | |
| Mini Xtreme Gravity | MINI AQUA | MINI EPA | | MINI HVLP | | MINI TECH | | |
| X 4100 series Gravity | XT01 | | | XT03 | | 96+ | 64S | |
| X 4100 series Pressure | XT01B | SUPER VIT | | XT03 | 3030 | 777 | 765 | |
| X 4100 series Suction | XT01 | | | | | 96+ | | |
| Mini Xtreme Presure | MINI VIT | MINI EPA | | MINI HVLP | | | | |
| Classic Pro XD | 21 EPA | | | HVLP | | 25 | 36 | 28 |
| Classic Lux | | | | | | 40 | 41 | 42 |
| Junior G | | | | | | Junior G Aircap | | |

## Air consumption of an Aircap. Why is it important?

**Air consumption** indicates the amount of air that a nozzle expels at a given pressure. At Sagola we express it in **L/min (cfm)** and use **2 bars (29 psi) as the dynamic reference pressure**.

The larger the **holes of the aircap**, the more air we will need to maintain that pressure of 2 bars. That's why HVLP nozzles with larger holes also have higher air consumption.

*HVLP aircap*

*EPA aircap*

This higher air consumption is directly related to the **features of our compressor**. The higher air consumption, the more resources of our air we will be consuming.

As a general and approximate rule, 1 HP of our compressor is capable of supplying about 100 L/min. (3.5 cfm) air at 2 bars. Therefore, to feed an **HVLP nozzle** with an air consumption of 450 L/min. (15.9 cfm) at 2 bar pressure; we will need at least a **5 HP compressor**.

# Aircaps

The **aircap model** is vital to achieve the desired results. The type of product we are going to apply and the application system we are going to use must both be taken into account when selecting an aircap. We will obtain the desired spray by correctly combining the aircap with the correct nozzle and needle kit, and a proper air supply.

## High transfer aircaps

| AIRCAP | Spraygun model | Painting System | Recommended application | Nozzle (mm.) | Air consumption | Code |
|---|---|---|---|---|---|---|
| DVR TITANIA PRO | 4600 XTREME | EPA | Quick Drying clearcoats. Single Stage. Ultra high gloss finishes | 1.2 - 1.4 | 315 L/min. 11.12 cfm | 56418627 |
| DVR CLEAR | | EPA | HS Clearcoats and Single Stage. OEM finishes | 1.2 - 1.4 | 295 L/min. 10.42 cfm | 56418630 |
| DVR AQUA | | EPA | Special Waterborne and Solvent basecoats. Ease of application at low pressure | 1.2 - 1.4 | 280 L/min. 9.88 cfm | 56418629 |
| DVR HVLP | | HVLP | Special colour waterborne and solvent basecoat. Minimum mist. Maximum savings and perfect paint uniformity. 0.68 bar (10 psi) at aircap | 1.2 - 1.4 | 450 L/min. 15.89 cfm | 56418628 |
| MINI AQUA | MINI XTREME Gravity | EPA | Special Spot Repair. UV fillers. Parts coating. Basecoats, clearcoats and waterborne products | 0.8 - 1.2 | 190 L/min. 6.71 cfm | 56418524 |
| MINI TECH | | EPA | Low viscosity products and feathering. Lines painting | 0.6 - 1.0 | 52 L/min. 11.12 cfm | 56418598 |
| MINI HVLP | MINI XTREME Gravity Pressure | HVLP | Special Spot Repair. Waterborne and Solvent basecoats | 1.0 - 1.2 | 325 L/min. 11.48 cfm | 56418526 |
| MINI EPA | | EPA | Basecoats and clearcoats | 0.8 - 1.2 | 190 L/min. 6.71 cfm | 56418525 |
| MINI VIT | MINI XTREME Pressure | EPA | High application speed. Wide fan patterns | 0.8 - 1.4 | 375 L/min. 13.24 cfm | 56418560 |
| GTO TECH | 3300 GTO CAR | EPA | MS and HS clearcoats. Max. gloss and performance. Good distribution and speed with waterborne | 1.2 - 1.4 | 285 L/min. 10.06 cfm | 56418551 |
| GTO HVLP | | HVLP | Minimum mist. Maximum savings and perfect paint uniformity. 0.68 bar (10 psi) at aircap | 1.2 - 1.4 | 360 L/min. 12.71 cfm | 56418552 |
| GTO EPA | 3300 GTO | EPA | Sanding fillers. Minimum air consumption | 1.4 - 1.8 | 250 L/min. 8.8 cfm | 56418645 |
| GTO EVO | | EPA | Quick drying fillers. Wet on wet fillers | 1.3 - 1.6 | 255 L/min. 9.01 cfm | 56418558 |
| GTO HVLP | | HVLP | Fillers. Minimum mist and maximum savings. 0.68 bar (10 psi) at aircap | 1.4 - 1.8 | 360 L/min. 12.71 cfm | 56418552 |
| GTO 64 S | | EPA | High thickness fillers | 2.2 - 2.5 | 310 L/min. 10.95 cfm | 56418646 |
| GTO 62 S | | EPA | Putties | 2.8 | 270 L/min. 9.53 cfm | 56418647 |
| CLASSIC 21 EPA | CLASSIC PRO XD | EPA | Finishes, fillers and primers | 1.3 - 1.8 | 225 L/min. 7.95 cfm | 56418639 |
| CLASSIC HVLP | | HVLP | Fillers and primers. Minimum mist and maximum savings. 0.68 bar (10 psi) at aircap | 1.3 - 1.8 | 355 L/min. 11.54 cfm | 56418643 |

# Aircaps

## High transfer aircaps

| AIRCAP | Spraygun model | Painting System | Recommended application | Nozzle (mm.) | Air consumption | Code |
|---|---|---|---|---|---|---|
| XT01 | X 4100 SERIES Gravity/ Suction | EPA | Clearcoats, enamels. Basecoats and metalized. High performance | 1.3 - 1.8 | 235 L/min. 8.30 cfm | 56418565 |
| XT01 B | X 4100 SERIES Pressure | EPA | High gloss finish | 0.8 - 1.4 | 295 L/min. 10.42 cfm | 56418564 |
| SUPER VIT | | EPA | Primers and fillers | 1.0 - 1.4 | 380 L/min. 13.42 cfm | 56418702 |
| XT03 | | HVLP | Minimum mist. Maximum atomization quality. 0.68 bar (10 psi) at aircap | 0.8 - 1.6 | 465 L/min. 16.42 cfm | 56418566 |
| 3030 | | HVLP | Finishes and primers. Minimum mist. 0.68 bar (10 psi) at aircap | 1.2 - 2.2 | 514 L/min. 18.15 cfm | 56418572 |

## Medium pressure aircaps

| AIRCAP | Spraygun model | Painting System | Recommended application | Nozzle (mm.) | Air consumption | Code |
|---|---|---|---|---|---|---|
| 96 | X 4100 SERIES Gravity/ Suction | Medium Pressure | High quality finishes. High application speed | 1.3 - 1.8 | 250 L/min. 8.83 cfm | 56418573 |
| 64 S | | Medium Pressure | High thicknesses. Fillers | 2.2 | 305 L/min. 10.77 cfm | 56418575 |
| 765 | X 4100 SERIES Pressure | Medium Pressure | Quality finishes. Wide fan patters | 1.0 - 1.8 | 315 L/min. 11.12 cfm | 56418571 |
| 777 | | Medium Pressure | High gloss finishes. Basecoats. High atomization power | 0.8 - 1.4 | 345 L/min. 12.18 cfm | 56418576 |
| 25 | CLASSIC PRO XD | Medium Pressure | Primers. High thickness | 2.0 | 155 L/min. 5.47 cfm | 56418640 |
| 36 | | Medium Pressure | Intermediate layers. High thicknesses | 2.5 | 205 L/min. 7.24 cfm | 56418642 |
| 28 | | Medium Pressure | High viscosity. Gun-applied putties. Forge effect | 2.8 | 240 L/min. 8.48 cfm | 56418641 |
| 05 | 475 XTECH | Medium Pressure | Feathering | 0.5 - 0.8 | 100 L/min. 3.53 cfm | 56418246 |
| 10 | | Medium Pressure | Retouches. Smart repairs | 1.0 | 110 L/min. 3.88 cfm | 56418247 |
| R5 | | Medium Pressure | High precision round jet. Feathering and fine lettering | 0.5 | 45 L/min. 1.59 cfm | 56418271 |

# Nozzle and Needle Kits

## NOZZLE AND NEEDLE KITS

| Spraygun | Code | Description |
|---|---|---|
| 46 range<br>4600 Xtreme | 10011137 | 1.20 Nozzle and Needle Kit |
| | 10011145 | 1.20 XL Nozzle and Needle Kit |
| | 10011138 | 1.30 Nozzle and Needle Kit |
| | 10011139 | 1.30 XL Nozzle and Needle Kit |
| | 10011140 | 1.40 Nozzle and Needle Kit |
| 41 range<br>X 4100 Series Gravity Suction Pressure<br>4100 Xtreme Gravity | 10011251 | 0.80 Nozzle and Needle Kit |
| | 10011252 | 1.00 Nozzle and Needle Kit |
| | 10011253 | 1.20 Nozzle and Needle Kit |
| | 10011121 | 1.30 Nozzle and Needle Kit |
| | 10011122 | 1.40 Nozzle and Needle Kit |
| | 10011123 | 1.60 Nozzle and Needle Kit |
| | 10011124 | 1.80 Nozzle and Needle Kit |
| | 10011125 | 2.00 Nozzle and Needle Kit |
| | 10011126 | 2.20 Nozzle and Needle Kit |
| | 10011127 | 2.50 Nozzle and Needle Kit |
| | 10011128 | 2.80 Nozzle and Needle Kit |
| 40 range<br>4100 Xtreme Suction Pressure | 10011100 | 0.80 Nozzle and Needle Kit |
| | 10011101 | 1.00 Nozzle and Needle Kit |
| | 10011102 | 1.20 Nozzle and Needle Kit |
| | 10011103 | 1.30 Nozzle and Needle Kit |
| | 10011104 | 1.40 Nozzle and Needle Kit |
| | 10011106 | 1.60 Nozzle and Needle Kit |
| | 10011107 | 1.80 Nozzle and Needle Kit |
| | 10011119 | 2.00 Nozzle and Needle Kit |
| | 10011108 | 2.20 Nozzle and Needle Kit |
| | 10011109 | 2.50 Nozzle and Needle Kit |
| | 10011120 | 2.80 Nozzle and Needle Kit |
| Mini range<br>Mini Xtreme Gravity Pressure | 10011200 | 0.80 Nozzle and Needle Kit |
| | 10011201 | 1.00 Nozzle and Needle Kit |
| | 10011202 | 1.20 Nozzle and Needle Kit |
| | 10011203 | 1.30 Nozzle and Needle Kit |
| | 10011204 | 1.40 Nozzle and Needle Kit |
| | 10011205 | 1.60 Nozzle and Needle Kit |
| | 10011206 | 1.80 Nozzle and Needle Kit |
| 3300 range<br>3300 GTO<br>Classic Pro | 10011187 | 1.00 Nozzle and Needle Kit |
| | 10011180 | 1.20 Nozzle and Needle Kit |
| | 10011191 | 1.30 Nozzle and Needle Kit |
| | 10011181 | 1.40 Nozzle and Needle Kit |
| | 10011182 | 1.60 Nozzle and Needle Kit |
| | 10011183 | 1.80 Nozzle and Needle Kit |
| | 10011188 | 2.00 Nozzle and Needle Kit |
| | 10011192 | 2.20 Nozzle and Needle Kit |
| | 10011189 | 2.50 Nozzle and Needle Kit |
| | 10011190 | 2.80 Nozzle and Needle Kit |

| Spraygun | Code | Description |
|---|---|---|
| Classic range<br>Classic Pro XD Gravity Suction | 10011293 | 1.30 Nozzle and Needle Kit |
| | 10011254 | 1.40 Nozzle and Needle Kit |
| | 10011255 | 1.60 Nozzle and Needle Kit |
| | 10011256 | 1.80 Nozzle and Needle Kit |
| | 10011257 | 2.00 Nozzle and Needle Kit |
| | 10011258 | 2.20 Nozzle and Needle Kit |
| | 10011259 | 2.50 Nozzle and Needle Kit |
| | 10011260 | 2.80 Nozzle and Needle Kit |
| 475 range<br>475 XTech | 10011198 | 1.00 Nozzle and Needle Kit |
| | 10011197 | 0.80 Nozzle and Needle Kit |
| | 10011195 | 0.50 Nozzle and Needle Kit |
| | 10011196 | 0.50 CHR Nozzle and Needle Kit |
| Lux range<br>Classic Lux Gravity | 10011380 | 1.40 No. & Ne. Kit + 40 Aircap |
| | 10011370 | 1.60 No. & Ne. Kit + 40 Aircap |
| | 10011371 | 1.80 No. & Ne. Kit + 40 Aircap |
| | 10011372 | 2.00 No. & Ne. Kit + 41 Aircap |
| | 10011373 | 2.50 No. & Ne. Kit + 42 Aircap |
| Classic Lux Suction | 10011374 | 1.60 No. & Ne. Kit + 38 Aircap |
| | 10011375 | 1.80 No. & Ne. Kit + 39 Aircap |
| 474 | 10011376 | 0.80 Nozzle and Needle Kit |
| | 10011377 | 1.00 Nozzle and Needle Kit |
| Junior G | 49000431 | 1.40 Nozzle and Needle Kit |
| | 49000432 | 1.60 Nozzle and Needle Kit |
| | 49000433 | 1.80 Nozzle and Needle Kit |
| 518 Pro | 10011199 | 2.00 Nozzle and Needle Kit |

# Sprayguns accessories

## RC1 Flow regulator with pressure gauge

Aluminium, very light. Ideal for high transfer HVLP and EPA spray guns. Red to green pressure scale (green within provisions of regulations). Assembled in seconds with hermetic hand tightening.

| Code |
|---|
| 56418020 |

## High precision flow regulator

High precision air-flow regulator kit. Solvent-proof gaskets. Suitable for 4600 Xtreme digital. Recommended for finishing spray guns.

| Code |
|---|
| 56418519 |

## RC2 Flow regulator with pressure gauge

Pressure gauge flow regulator. Exact input pressure gun. High quality gauge green scale for high transfer guns.

| Code |
|---|
| 40000335 |

## Pressurizer kit

For gravity spray guns. Gravity cup pressure kit for high viscosity materials spraying. Non-return valve included.

| Code |
|---|
| 56418513 |

## 4600 HVLP Tester

Pressure checker for HVLP aircaps (4600 Xtreme spray gun model).

| Code |
|---|
| 10010051 |

## SP2 and SP1 Magnetic Stands

Magnetic stand for 1 (SP1) or 2 (SP2) spray guns. Solvent-proof paint. Supports PPS type adapters. Maximum robustness. High holding power due to two powerful magnets.

| Version | Code |
|---|---|
| SP 1 | 40000245 |
| SP 2 | 40000246 |

## Cleaning kit

Complete cleaning set, including one brush for outside cleaning, and rods of different sizes for all the inner paths of the spray gun. Supplied in a practical show case.

| Code |
|---|
| 40000086 |

## Lubricant grease

Natural grease, specially made for spray guns and painting equipments moving parts lubrication. High consistency, even under extreme temperatures. Long lasting, it doesn't lose properties over the time.

| Code |
|---|
| 56418589 |

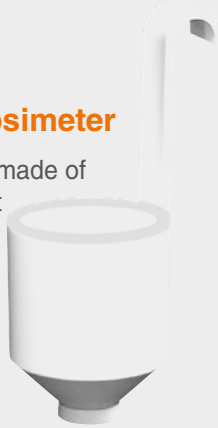

## Ford 4 - Viscosimeter

Viscosity dip cup, made of polyamide (solvent resistant) with metal outlet hole (brass).

| Code |
|---|
| 56418001 |

# Sprayguns accessories

## GRAVITY CUPS

| Description | Spraygun model | Code |
|---|---|---|
| 650 ml. Gravity cup | 4600 XTREME | 56418432 |
| 1,000 ml. Gravity cup | 4600 XTREME | 56418505 |
| 650 ml. Gravity cup | X 4100 / 3300 / PRO XD | 56418084 |
| 650 ml. Gravity cup (without product filter) | X 4100 / 3300 / PRO XD | 56418085 |
| 1.000 ml. Gravity cup (metallic) | X 4100 / 3300 / PRO XD | 56418082 |
| 650 ml. Gravity cup | LUX | 56418420 |
| 125 ml. Gravity cup | MINI XTREME / 475 | 56418081 |
| 125 ml. Black Gravity cup | MINI XTREME / 475 | 56418099 |
| 200 ml. Gravity cup | MINI XTREME / 475 | 56418079 |
| 500 ml. Gravity cup | MINI XTREME / 475 | 56418080 |
| 600 ml. Gravity cup | JUNIOR G | 49000430 |
| 120 ml. Gravity cup | 474 | 56418431 |

## PRODUCT FILTERS FOR GRAVITY DEPOSITS

| Description | Spraygun model | Code |
|---|---|---|
| Gravity deposit product filter 650 ml. (10 units) | 4600 XTREME | 56418438 |
| Gravity deposit product filter 650 ml. (10 units) | X 4100 / 3300 / PRO XD | 56418017 |
| Gravity deposit product filter 500 ml. (10 units) | MINI XTREME | 56418059 |
| Gravity deposit product filter 125 ml. (6 units) | MINI XTREME | 56418061 |
| Gravity deposit product filter 120 ml. (5 units) | 474 | 56418479 |

## ADAPTATION COUPLINGS FOR DISPOSABLE PPS CUPS

| Description | Spraygun model | Code |
|---|---|---|
| 3M PPS Adaptation coupling | 4600 XTREME | 55711607 |
| 3M PPS 2.0 Adaptation coupling | | 55711626 |
| MIPA / CARWOX Adaptation coupling | | 55711617 |
| GERSON / NORTON Adaptation coupling | | 55711609 |
| FLEXI CUP Adaptation coupling | | 55711610 |
| DEVILBISS / DEKUPS Adaptation coupling | | 55711619 |
| SATA RPS Adaptation coupling | | 55711621 |
| COLAD Adaptation coupling | | 55711624 |
| 3M PPS Adaptation coupling | MINI XTREME<br>3300 GTO<br>X 4100<br>PRO XD | 55711612 |
| 3M PPS 2.0 Adaptation coupling | | 55711627 |
| MIPA / CARWOX Adaptation coupling | | 55711616 |
| GERSON / NORTON Adaptation coupling | | 55711614 |
| FLEXI CUP Adaptation coupling | | 55711615 |
| DEVILBISS / DEKUPS Adaptation coupling | | 55711618 |
| SATA RPS Adaptation coupling | | 55711620 |
| COLAD Adaptation coupling | | 55711623 |

# Sprayguns accessories

## SUCTION DEPOSITS AND SPARE PARTS

| Description | Spraygun model | Code |
|---|---|---|
| 1,000 ml. Suction deposit | X 4100 / 3300 PRO XD / LUX | 56418074 |
| Suction deposit product filter (10 units) | | 56418014 |
| Suction deposit anti-drip lid (5 units) | | 56418013 |
| Suction deposit closure washer (5 units) | | 56418509 |

## AIR VALVES AND PACKING GLANDS

| Description | Spraygun model | Code |
|---|---|---|
| Air valve Kit (standard version) | 4600 XTREME | 56418634 |
| Air valve Kit (digital version) | 4600 XTREME | 56418636 |
| Air valve Kit | MINI XTREME | 56418644 |
| Air valve Kit | X 4100 | 56418669 |
| Air valve Kit | 3300 | 56418664 |
| Air valve Kit | PRO XD | 56418481 |
| Air valve Kit | LUX | 56418715 |
| Air valve Kit | JUNIOR G | 49000422 |
| Air valve Kit | 474 | 56418449 |
| Paint Packing nut | 4600 XTREME / X 4100 | 56411616 |
| Paint Packing nut | MINI XTREME | 56418034 |
| Paint Packing nut | 3300 | 57212211 |
| Paint Packing nut | PRO XD / LUX | 56411619 |
| Paint Packing nut | JUNIOR G | 49000425 |
| Paint Packing nut | 474 | 56418452 |

## OTHER ACCESSORIES

| Description | Code |
|---|---|
| Briefcase for sprayguns | 10141750 |
| Spraygun locker | 70000010 |
| AT30 Degreaser Spray | 40000490 |

# Airbrush and Touch-Up's

***Your Airbrush project is important to us.***

***We take care of the little things, so you don't have to.***

***Sagola Airbrushes are designed for:***

***> Feathering***

***> Precise Part Touch Up's***

***> Part Marking***

# XTech Airbrushes

# We take care of the presice details

**with Sagola's range of professional airbrushes**

## XTech Airbrushes

**SAGOLA's XTech Airbrushes** is engineered to meet the demands of the discerning airbrush artist and professional painter.

Airbrushes for automotive, fine arts, bodypaint, tanning, illustration, make-up, model making, confectionery, temporary tattoo - tattoo, textiles, nail decoration...

The range is divided in 5 different models, one for each type of application.

- Needle closing and packing made of Teflon.
- Highly precise and smooth air and product valve.
- Working pressure 15/30 psi 1/2 bar
- Air inlet connection: 1/8" male

### XTech 100 Airbrush

Sagola XTech 100 airbrush. Dual action professional airbrush and gravity feed paint system.

0.2 mm. neddle and nozzle set up, that offers a superfine spraying, for the highest precision.

0.9 ml. deposit to use with small quantity of paint. Ideal for quick colour changes.

| Version | Code |
|---|---|
| Ø 0.2 **XTech 100** | 17410501 |

### XTech 200 Airbrush

Sagola XTech 200 airbrush. Dual action professional airbrush and gravity feed paint system.

0.2 and 0.3 mm. neddle and nozzles, that offer a fine spraying and a high precision.

1.5 ml. deposit to use with medium amounts of paint. Easy to clean. Ideal for quick colour changes.

| Version | Code |
|---|---|
| Ø 0.2 **XTech 200** | 17410601 |
| Ø 0.3 **XTech 200** | 17410602 |

# XTech Airbrushes

## XTech 300 Airbrush

Sagola XTech 300 airbrush. Dual action professional airbrush and gravity feed paint system.

0.3 mm. neddle and nozzle set up, that offers a fine pulverization and a good precision.

5 ml. deposit to use any paint quantity, but maintaining the advantage of an easy cleaning and colour change.

| Version | Code |
|---|---|
| Ø 0.3 **XTech 300** | 17410701 |

## XTech 400 Airbrush

Sagola XTech 400 airbrush. Dual action professional airbrush and gravity feed paint system.

0.3 mm. neddle and nozzle set up, that offers a fine pulverization and a good precision. Ideal for murals for a bit thicker colors.

9 ml. deposit to use any paint quantity, but maintaining the advantage of an easy cleaning and colour change.

| Version | Code |
|---|---|
| Ø 0.3 **XTech 400** | 17410801 |

## XTech 500 Airbrush

Sagola XTech 500 airbrush. Dual action professional airbrush and suction feed paint system.

0.3 and 0.5 mm. neddle and nozzles, that offer a fine spraying from a high precision to a large spray pattern.

22 ml. suction deposit with fast change system. Ideal for changing color in an instant.

Ideal for projects such as T-shirts, Remote control cars.

| Version | Code |
|---|---|
| Ø 0.3 **XTech 500** | 17410901 |
| Ø 0.5 **XTech 500** | 17410902 |

# XTech Airbrushes Accessories

Sagola's offers a comprehensive range of accessories for the XTech range of airbrushes.

## Glass Paint Jars

Glass paint jars with cover. 22 ml. and 50 ml. versions. The 22 ml. version may include adapter to XTech 500.

| Code | Version |
|---|---|
| 40000500 | 22 ml. deposit with cover and adapter |
| 40000501 | 22 ml. deposit with cover |
| 40000504 | 50 ml. deposit with cover |

## Plastic Paint Jars

Plastic paint jars with cover and adapter to XTech 500.

| Code | Version |
|---|---|
| 40000503 | 60 ml. deposit with cover and adapter |
| 40000502 | 100 ml. deposit with cover and adapter |

## Lateral metallic cups

With adapter to XTech 500.
7 ml. capacity

With adapter to XTech 400.
9 ml. capacity

| Code | Version |
|---|---|
| 52810001 | Lateral metallic cup for XTech 500 |
| 40000505 | Lateral metallic cup for XTech 400 |

## Air hose

Length 3 meters.
Textile material.

| Code | Version |
|---|---|
| 56414203 | 3 m. Air hose 1/8" F - 1/8" F |
| 56414209 | 3 m. Air hose 1/4" F - 1/8" F |

## Plug + regulator Kit

| Code | Version |
|---|---|
| 11011603 | BSPP 1/8" M - F |

## Plug + connector Kit

| Code | Version |
|---|---|
| 11011601 | BSPP 1/8" M - F |
| 11011602 | 1/8" F - Ø 4 mm. BSPP "Barb" |

## Multi-airbrush table supports

| Code | Version |
|---|---|
| 40000344 | 4 airbrushes table support (in line) |
| 40000242 | 4 airbrushes table support |

## Airbrush cleaning Kit

| Code | Version |
|---|---|
| 40000241 | Clean 3N1 |

# XTech Airbrushes

## XTech 100 Airbrush Spare parts

The Sagola Xtech range is covered by a **3-year** manufacturers warranty from SAGOLA.
Please follow the recommended housekeeping and maintenance procedure as prescribed in the operation manuals.

*Last updated version of the exploded view*

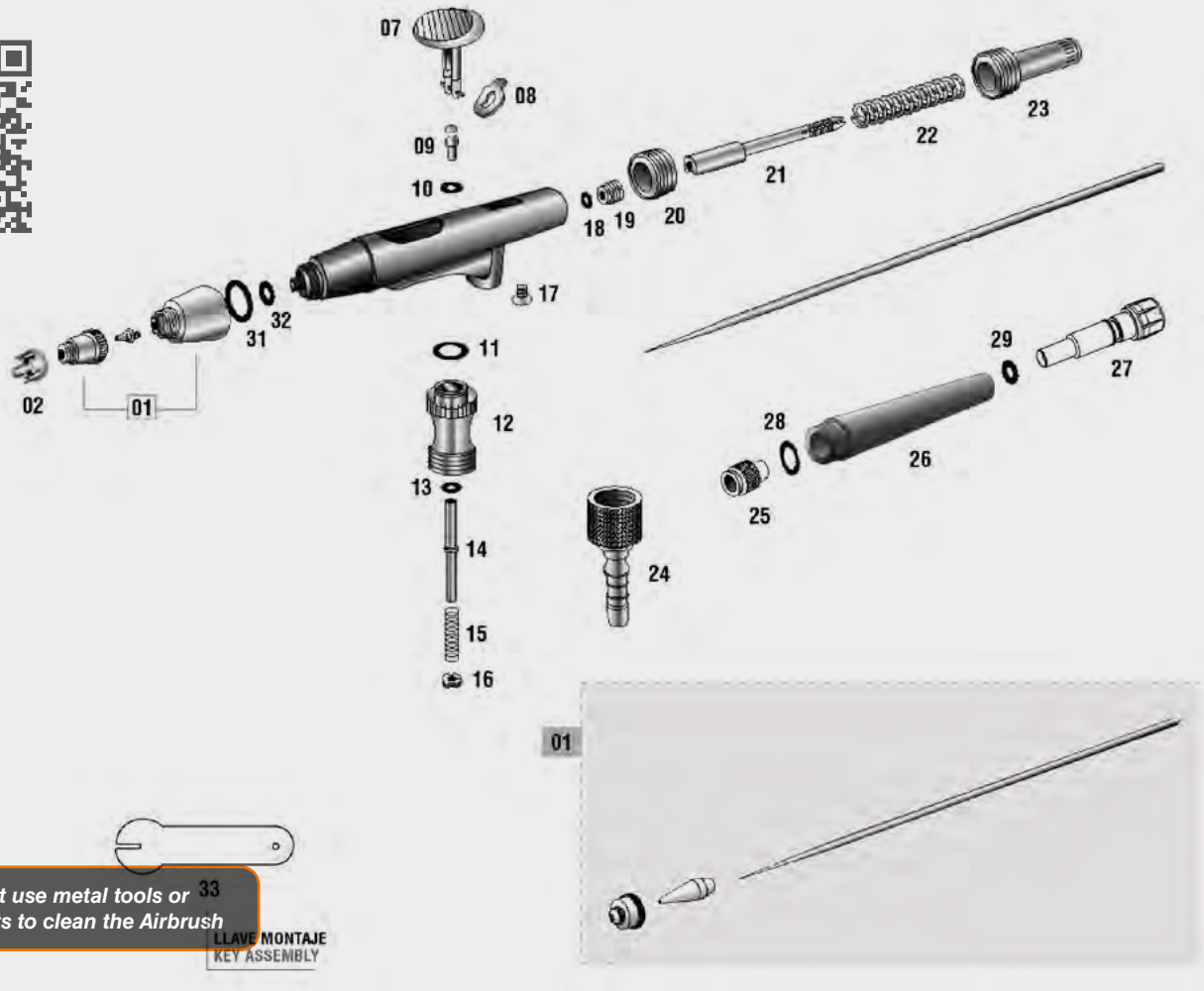


*Do not use metal tools or objects to clean the Airbrush*

### SPARE PARTS — XTECH 100

| No. | Code | Description |
|---|---|---|
| 1 | 49000586 | 0.20 Nozzle and needle Kit + aircap |
| 2 | 52710051 | Airbrush head protector |
| 7 | 49000591 | Trigger |
| 8 | 49000592 | Reverse run Lever |
| 9 | 49000593 | Switch piston |
| 10 | 49000594 | Pulsator closing O-ring |
| 11 | 49000595 | Air valve closing O-ring |
| 12 | 49000596 | Air valve guide box |
| 13 | 49000597 | Air valve washer |
| 14 | 49000598 | Air valve shaft |
| 15 | 49000599 | Air valve spring |
| 16 | 49000600 | Air valve washer |
| 17 | 49000601 | Body screw |
| 18 | 49000602 | O-ring closing needle packing screw |

### SPARE PARTS — XTECH 100

| No. | Code | Description |
|---|---|---|
| 19 | 49000603 | Needle packing screw |
| 20 | 49000604 | Body nut lock |
| 21 | 49000605 | Needle guide box |
| 22 | 49000606 | Needle spring |
| 23 | 49000607 | Needle top spring |
| 24 | 49000608 | Air inlet Kit |
| 25 | 49000609 | Needle lock nut |
| 26 | 52710912 | Body handle |
| 27 | 57810379 | Regulator wheel |
| 28 | 54250949 | O-ring 8.50 x 1.00 nitrile |
| 29 | 54251019 | O-ring 4.00 x 1.20 nitrile |
| 31 | 49000611 | O-ring closing nozzle |
| 32 | 49000612 | O-ring closing needle |
| 33 | 49000613 | Accessory wrench |

# XTech Airbrushes

## XTech 200 Airbrush Spare parts

The Sagola Xtech range is covered by a **3-year** manufacturers warranty from SAGOLA.
Please follow the recommended housekeeping and maintenance procedure as prescribed in the operation manuals.

***Do not use metal tools or objects to clean the Airbrush***

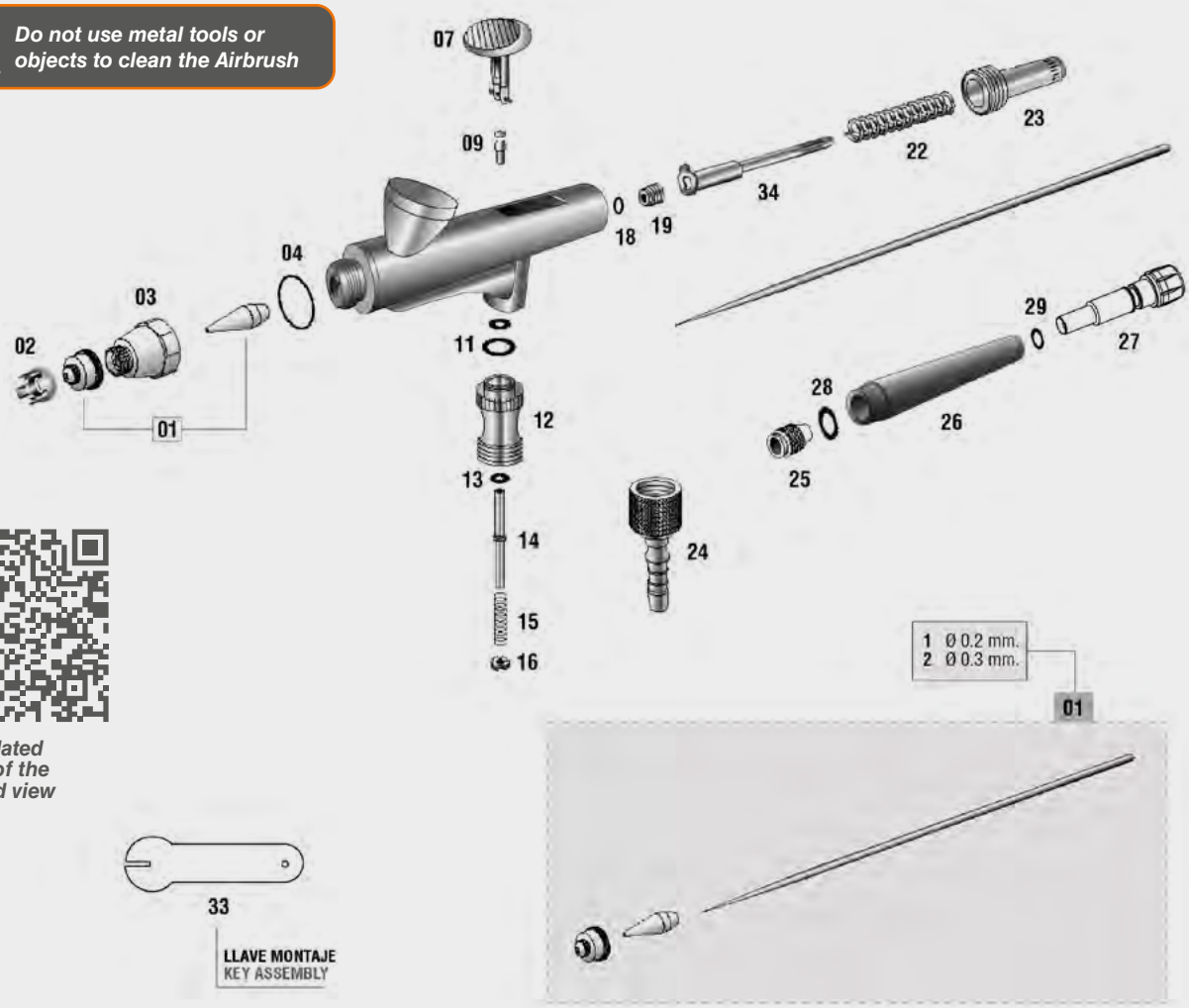


***Last updated version of the exploded view***

### SPARE PARTS — XTECH 200

| No. | Code | Description |
|---|---|---|
| 01/1 | 49000583 | 0.20 Nozzle and needle Kit + aircap |
| 01/2 | 49000584 | 0.30 Nozzle and needle Kit + aircap |
| 2 | 52710051 | Airbrush head protector |
| 3 | 49000588 | Aircap nut |
| 4 | 49000589 | O-ring closing aircap |
| 7 | 49000591 | Trigger |
| 9 | 49000593 | Switch piston |
| 11 | 49000595 | Air valve closing O-ring |
| 12 | 49000596 | Air valve guide box |
| 13 | 49000597 | Air valve washer |
| 14 | 49000598 | Air valve shaft |
| 15 | 49000599 | Air valve spring |
| 16 | 49000600 | Air valve washer |

### SPARE PARTS — XTECH 200

| No. | Code | Description |
|---|---|---|
| 18 | 49000602 | O-ring closing needle packing screw |
| 19 | 49000603 | Needle packing screw |
| 22 | 49000606 | Needle spring |
| 23 | 49000607 | Needle top spring |
| 24 | 49000608 | Air inlet Kit |
| 25 | 49000609 | Needle lock nut |
| 26 | 52710913 | Body handle |
| 27 | 57810379 | Regulator wheel |
| 28 | 54250949 | O-ring 8.50 x 1.00 nitrile |
| 29 | 54251019 | O-ring 4.00 x 1.20 nitrile |
| 33 | 49000613 | Accessory wrench |
| 34 | 49000755 | Needle guide box + Reverse run Lever |

# XTech Airbrushes

## XTech 300 Airbrush Spare parts

The Sagola Xtech range is covered by a **3-year** manufacturers warranty from SAGOLA.
Please follow the recommended housekeeping and maintenance procedure as prescribed in the operation manuals.

*Last updated version of the exploded view*

### SPARE PARTS — XTECH 300

| No. | Code | Description |
|---|---|---|
| 1 | 49000584 | 0.30 Nozzle and needle Kit + aircap |
| 2 | 52710051 | Airbrush head protector |
| 3 | 49000588 | Aircap nut |
| 4 | 49000589 | Aircap closing O-ring |
| 7 | 49000591 | Trigger |
| 9 | 49000593 | Switch piston |
| 11 | 49000595 | Air valve closing O-ring |
| 12 | 49000596 | Air valve guide box |
| 13 | 49000597 | Air valve washer |
| 14 | 49000598 | Air valve shaft |
| 15 | 49000599 | Air valve spring |
| 16 | 49000600 | Air valve washer |
| 17 | 49000601 | Body screw |

### SPARE PARTS — XTECH 300

| No. | Code | Description |
|---|---|---|
| 18 | 49000602 | O-ring closing needle packing screw |
| 19 | 49000603 | Needle packing screw |
| 22 | 49000606 | Needle spring |
| 23 | 49000607 | Needle top spring |
| 24 | 49000608 | Air inlet Kit |
| 25 | 49000609 | Needle lock nut |
| 26 | 52710913 | Body handle |
| 27 | 57810379 | Regulator wheel |
| 28 | 54250949 | O-ring 8.50 x 1.00 nitrile |
| 29 | 54251019 | O-ring 4.00 x 1.20 nitrile |
| 30 | 49000758 | Cup lid |
| 33 | 49000613 | Accessory wrench |
| 34 | 49000755 | Needle guide box + Reverse run Lever |

# XTech Airbrushes

## XTech 400 Airbrush Spare parts

The Sagola Xtech range is covered by a **3-year** manufacturers warranty from SAGOLA.
Please follow the recommended housekeeping and maintenance procedure as prescribed in the operation manuals.

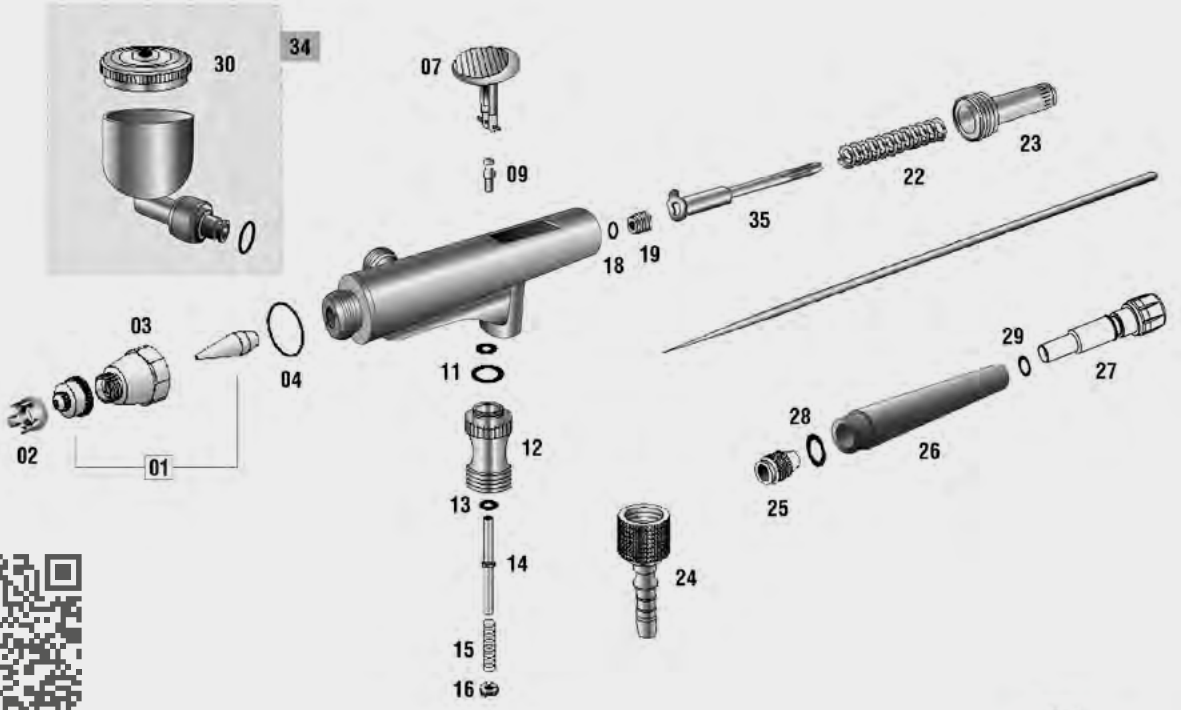


*Last updated version of the exploded view*

### SPARE PARTS — XTECH 400

| No. | Code | Description |
|---|---|---|
| 1 | 49000584 | 0.30 Nozzle and needle Kit + aircap |
| 2 | 52710051 | Airbrush head protector |
| 3 | 49000588 | Aircap nut |
| 4 | 49000589 | Aircap closing O-ring |
| 7 | 49000591 | Trigger |
| 9 | 49000593 | Switch piston |
| 11 | 49000595 | Air valve closing O-ring |
| 12 | 49000596 | Air valve guide box |
| 13 | 49000597 | Air valve washer |
| 14 | 49000598 | Air valve shaft |
| 15 | 49000599 | Air valve spring |
| 16 | 49000600 | Air valve washer |
| 18 | 49000602 | O-ring closing needle packing screw |

### SPARE PARTS — XTECH 400

| No. | Code | Description |
|---|---|---|
| 19 | 49000603 | Needle packing screw |
| 22 | 49000606 | Needle spring |
| 23 | 49000607 | Needle top spring |
| 24 | 49000608 | Air inlet Kit |
| 25 | 49000609 | Needle lock nut |
| 26 | 52710913 | Body handle |
| 27 | 57810379 | Regulator wheel |
| 28 | 54250949 | O-ring 8.50 x 1.00 nitrile |
| 29 | 54251019 | O-ring 4.00 x 1.20 nitrile |
| 30 | 49000610 | Lateral cup lid |
| 33 | 49000613 | Accessory wrench |
| 34 | 40000505 | 9 c.c. lateral cup Kit |
| 35 | 49000755 | Needle guide box + Reverse run Lever |

# XTech Airbrushes

## XTech 500 Airbrush Spare parts

The Sagola Xtech range is covered by a **3-year** manufacturers warranty from SAGOLA.
Please follow the recommended housekeeping and maintenance procedure as prescribed in the operation manuals.

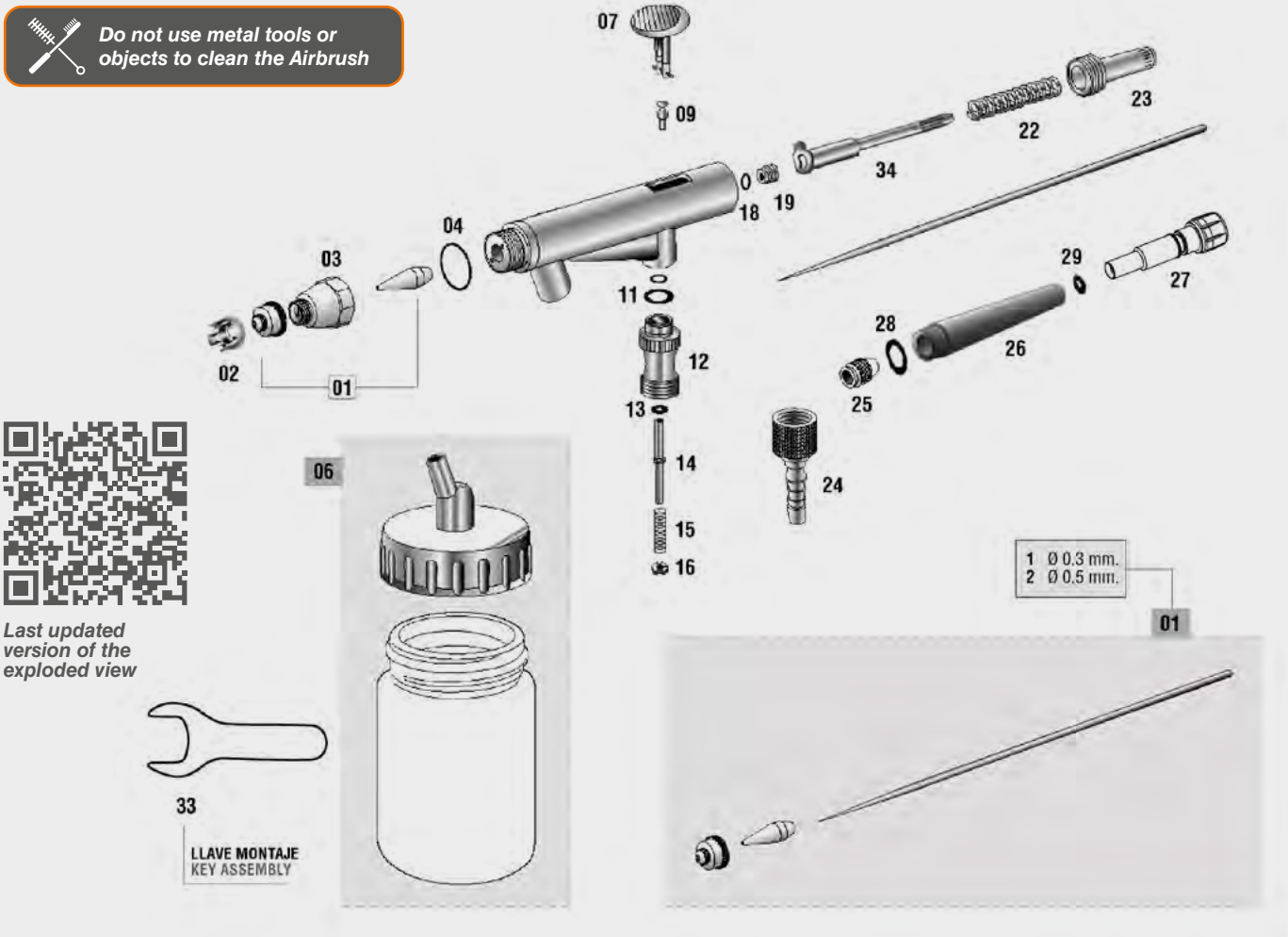


### SPARE PARTS — XTECH 500

| No. | Code | Description |
|---|---|---|
| 01/1 | 49000584 | 0.30 Nozzle and needle Kit + aircap |
| 01/2 | 49000585 | 0.50 Nozzle and needle Kit + aircap |
| 2 | 52710051 | Airbrush head protector |
| 3 | 49000588 | Aircap nut |
| 4 | 49000589 | Aircap closing O-ring |
| 6 | 40000500 | 22 c.c. cup Kit + Adapter cover |
| 7 | 49000591 | Trigger |
| 9 | 49000593 | Switch piston |
| 11 | 49000595 | Air valve closing O-ring |
| 12 | 49000596 | Air valve guide box |
| 13 | 49000597 | Air valve washer |
| 14 | 49000598 | Air valve shaft |
| 15 | 49000599 | Air valve spring |

### SPARE PARTS — XTECH 500

| No. | Code | Description |
|---|---|---|
| 16 | 49000600 | Air valve washer |
| 18 | 49000602 | O-ring closing needle packing screw |
| 19 | 49000603 | Needle packing screw |
| 22 | 49000606 | Needle spring |
| 23 | 49000607 | Needle top spring |
| 24 | 49000608 | Air inlet Kit |
| 25 | 49000609 | Needle lock nut |
| 26 | 52710913 | Body handle |
| 27 | 57810379 | Regulator wheel |
| 28 | 54250949 | O-ring 8.50 x 1.00 nitrile |
| 29 | 54251019 | O-ring 4.00 x 1.20 nitrile |
| 33 | 49000613 | Accessory wrench |
| 34 | 49000755 | Needle guide box + Reverse run Lever |

# CP Compressors

*CP 2000*

*CP 1000*

CP compressors have been specifically designed for use with the XTech range of airbrushes. Compact, powerful and with high reliability.

Both models incorporate a filter with an air outlet regulator and a automatic stop switch.

The sound level is minimal, with a maximum of 47 dB. They are ultra-silent.

Single cylinder compressor (CP 1000) and two-cylinder compressor (CP 2000). Minimum maintenance.

**REGULATIONS:**
2006/42/CE
EN 1012-1:2010, EN 60335-1:2002, A11:2004, A1:2004, A12:2006, A2:2006, A13:2008, A14:2010, A15:2011, EN 62233:2008

## TECHNICAL DATA

**CP COMPRESSORS**

| Compressor model | CP2000 | | CP1000 | |
|---|---|---|---|---|
| Weight | 10.7 Kg | 23.59 lbs | 5.8 Kg. | 12.79 lbs |
| Dimensions | 35 x 14 x 36 cm. | 12.2 x 5.3 x 14.1” | 31 x 13.5 x 36 cm. | 12.2 x 5.3 x 14.1” |
| Power | 1/4 HP | | 1/6 HP | |
| Air tank | Double piston compressor 3.5 L (118.3 fl oz) | | Single piston compressor 3 L (101.4 fl oz) | |
| Speed | 1,450 - 1,700 r.p.m. | | 1,450 - 1,700 r.p.m. | |
| Air flow | 35 - 40 L/min. | 1.2 - 1.4 cfm | 20 - 23 L/min. | 0.7 - 0.8 cfm |
| Electric switch | P. “0”: OFF<br>P. “I”: Auto Start at less than 3 bar / 43.5 psi<br>P. “II”: Maximum pressure 6 bar / 87 psi. No stops. | | Auto start: Auto Start at less than 3 bar / 43.5 psi<br>Auto stop: Auto power off at 4 bar / 58 psi | |
| Pressure regulator | 0 - 10 bar | 0 - 145 psi | 0 - 7 bar | 0 - 102 psi |
| Noise level | 47 dB | | 47 dB | |

## VERSIONS

| Description | Code |
|---|---|
| CP 2000 Compressor UE 220 - 240 V / 50 Hz | **10620801** |
| CP 2000 Compressor US 110 - 130 V / 60 Hz | **10620802** |
| CP 1000 Compressor UE 220 - 240 V / 50 Hz | **10620701** |
| CP 1000 Compressor US 110 - 130 V / 60 Hz | **10620702** |

# Premium 3800 case

Complete spray design equipment kit. The two star products of Sagola range for the professional airbrush with all accessories come together in a practical case.

Equipped with the 475 XTech gravity spraygun with R5 aircap for maximum precision in the smallest fades, fluid nozzle Ø 0.5 mm., air flow regulator and a maintenance whrench.

XTech 500 high precision double effect airbrush with 22 ml. suction deposit.

Includes high quality braided air hose for airbrushes.

| TECHNICAL DATA | | PREMIUM 3800 |
|---|---|---|
| Full case weight | 3 Kilograms | 6.6 lbs |
| Case dimensions | 40 x 35 x 8 cm. | 15.7 x 13.8 x 3.1 " |
| 475 XTech spraygun features | see page 36 | |
| XTech 500 airbrush features | see page 111 | |

| Description | Code |
|---|---|
| Premium 3800 case | 25410502 |

## Contents of the Premium 3800 Case kit

Each Sagola Premium 3800 is supplied with:

- Transport case.
- 475 XTech gravity spraygun with R5 aircap and fluid nozzle Ø 0.5 mm.
- XTech 500 airbrush with suction deposit.
- Quick plug for gravity gun.
- 3 meters special braided hose for airbrushing.
- Accessory wrench.

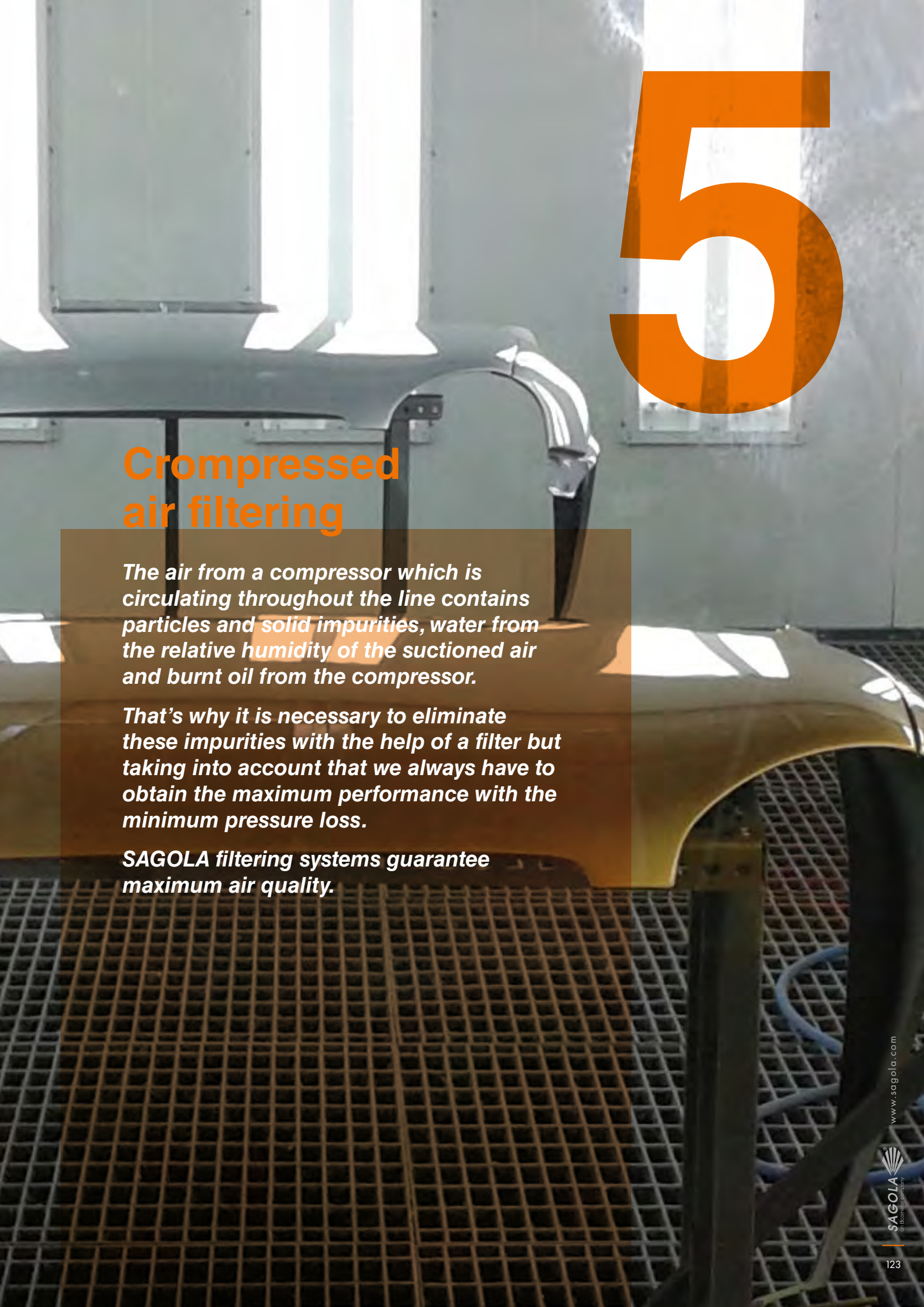

# 5

## Crompressed air filtering

***The air from a compressor which is circulating throughout the line contains particles and solid impurities, water from the relative humidity of the suctioned air and burnt oil from the compressor.***

***That's why it is necessary to eliminate these impurities with the help of a filter but taking into account that we always have to obtain the maximum performance with the minimum pressure loss.***

***SAGOLA filtering systems guarantee maximum air quality.***

## Temperature

- General recommendation: Between 15ºC and 25ºC
- At least 5ºC above the dew point of the booth.
- At least 5ºC above the dew point of compressed air.

## Dew point

| | |
|---|---|
| DP < 3ºC | Optimum air quality |
| 3ºC < DP > 7ºC | Good air quality |
| DP > 7ºC | Poor air quality |

## Thermohygrometer

content in the
Sagola Air Quality Test.
Measure:
Compressed air temperature.
Compressed air dew point.
Relative humidity of compressed air.

## Pack 6000X

Compressed air
temperature regulation

## Temperature

Part temperature at least 5ºC
above booth dew point.

## Elcometer 319

Measurement of environmental
conditions in the booth and
on the surface

# AIR, TEMPERATURE AND HUMIDITY

## THE PERFECT BALANCE BETWEEN ALL THE BOOTH ELEMENTS

**Sagola's air treatment tools and diagnostic equipment for environmental conditions provide the necessary information to achieve the perfect balance between all the elements of the booth.**

### Booth filter

**Elimination of condensates and vapors of water and oil.**
**Solid particle retention.**

### Solids trap

**Content in the Sagola Air Quality Test.**

**Diagnosis of the presence of solid particles, air or oil condensates in the compressed air network.**

## 5000X range filters

# Air filtering systems

**It is necessary to remove the impurities from the compressed air by means of a filter, bearing in mind that the maximum performance must be obtained for the painting job.**

SAGOLA FILTERING SYSTEMS guarantee maximum air quality and minimum pressure loss of line.

The air from a compressor which is circulating throughout the line contains particles and solid impurities, water from the relative humidity of the suctioned air and burnt oil from the compressor.

That's why it is necessary to eliminate these impurities with the help of a filter but taking into account that we always have to obtain the maximum performance with the minimum pressure loss.

SAGOLA filtering systems guarantee maximum air quality.

With the recent emergence of the new regulations concerning the drastic decrease of solvents in the new primers, basecoats, HS clearcoats and even in the waterborne paints, the existence of impurities in the compressed air which is used to spray is now more critical for the final results of the bodywork, mainly due to:

- In HS: the high gloss of these paints, their poor proportion of solvents and their decrease in the number of finishing coats make that the small particles proceeding from the compressed air become striking.

- In waterborne paints: their high incompatibility with any oil and organic fumes makes the air quality requirements very high.

## Keys for the correct selection of the filter

The type and condition of the installed compressor and the quality of the air it is supplying must be taken into account for the election of a filtration system to install.

For example, If greater air purity is required a model **5200X Coalescent Purifier Regulator** should be installed -with which the following will be eliminated water and solid particles larger than 0.01 microns, water aerosols (C>0.01 mg/m$^3$) and oil aerosols (C>0.01 mg/m$^3$)- or a **Purifier regulator with Coalescent Filter plus Active Charcoal model 5300X** -used when it is necessary to eliminate oil, hydrocarbons or water in vapour form , organic fumes are present, foul air, solid particles larger than 0.01 microns and residual oil: maximum 0.003 p.p.m.-.

# 5000X range filters

Air filters designed and developed for the new technologies of automobile painting. Ideal for water-borne and HS paints.

## Maximum air quality

The quality of compressed air is becoming more important every day in production processes. Contaminated air causes damage and manufacturing costs in many cases.

Not only is it important to have good quality compressed air where it may come into contact with the product, it is therefore essential to carry out a quality analysis of the compressed air.

Obtaining a good quality of compressed air is essential for a correct operation of the machines and to achieve an optimal final finish in the production processes.

## Minimum pressure loss within the line

For these reasons it is necessary to eliminate impurities by means of a filter, taking into account that the maximum performance with the minimum pressure loss must be obtained.

## Ventajas principales

- Air-assisted regulator.
- Rapid discharge; instant pressure reduction.
- Aluminium body. CNC machined for toughness.
- Unmanned discharge of liquids and impurities.
- Maximum flow 3,000 L/min., outlets for 2 guns.
- 8µ filter + Deflector of high capacity of solid and liquids retention.
- 1/2" inch air inlet.
- Filter life control. We incorporate dynamic element of life control.

## Complete 5000X Series Filtration System

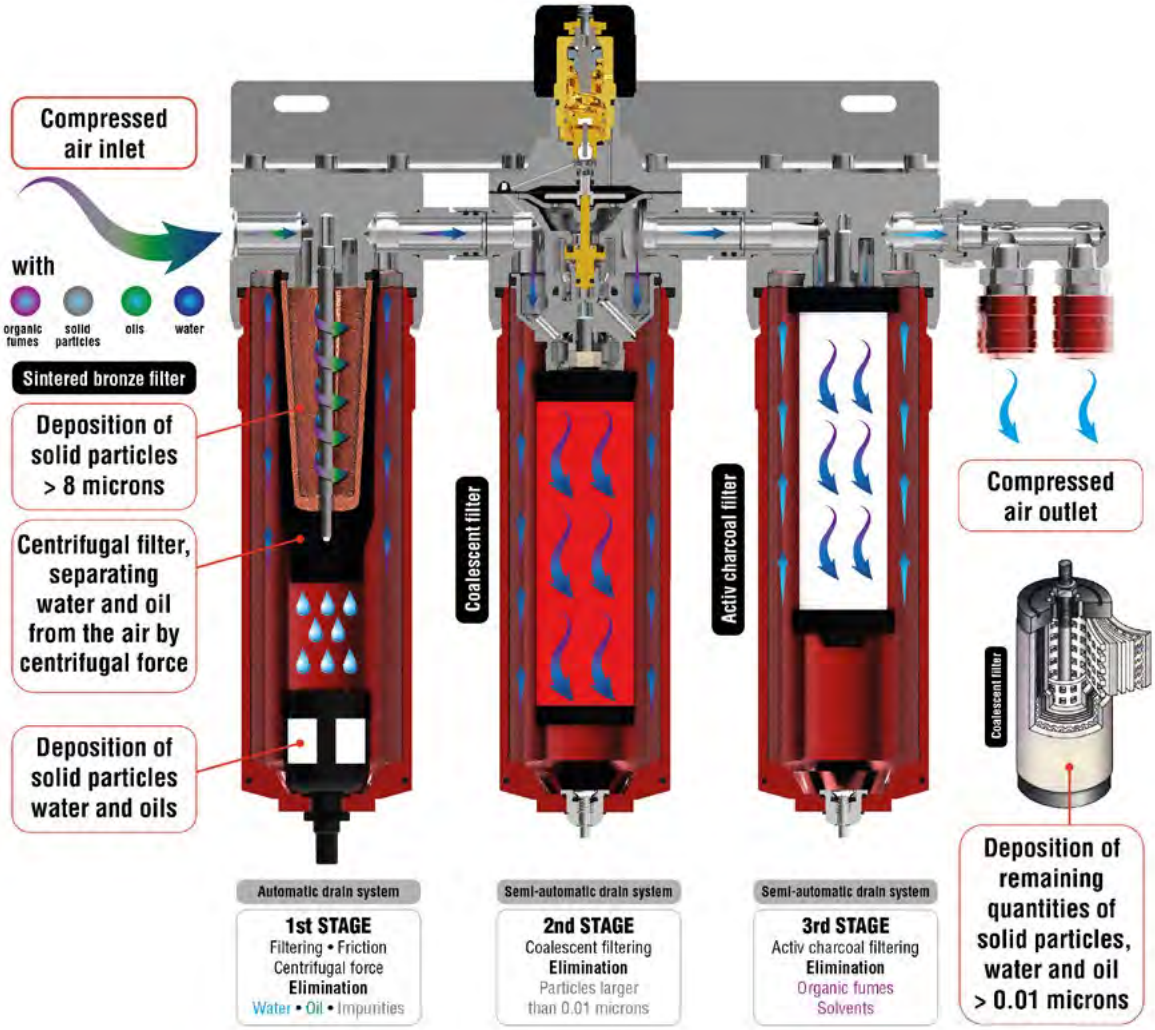

# 5000X range filters

## 5300X Filter

Sagola 5300X filter offers the maximum filtration level in spray booths and painting lines where finishing is highly demanding.

Three filtered stages. Sinterised brass 8 microns pre filtration is incorporated, followed by a 0.01 micron Coalescent filter and final filtration by a wide surface active charcoal filter.

Ideal for waterborne painting lines (and organic vapor problems in the network).

This model eliminates, in addition to water and impurities, organic fumes and foul air.

**REGULATIONS:**
2006/42/CE
ATEX Ex 2 II GX
UNE EN-13463-1

### TECHNICAL DATA — 5300X FILTER

| | | | |
|---|---|---|---|
| Weight | 6.62 Kilograms | | 14.59 lbs |
| Dimensions | 38.3 X 12.3 X 37.2 cm. | | 15.08 x 4.84 x 14.66 “ |
| Air flow at 7 bar (101 psi) | 2,870 L/min. | | 101 cfm |
| Air outlet connection | BSP 1/4” Female | Air intlet connection | BSP 1/2” Female |
| Filtering type (3 stages) | **1°** 8 µ Sinterised brass / **2°** 0.01 µ Coalescent filter / **3°** Active charcoal filter | | |
| Maximun working pressure | 12 bar | | 174 psi |
| Maximum working temperature | 90°C | | 194°F |
| Drain system | 1 Automatic drain + 2 Semi-automatic drain | | |

### VERSIONS

| Description | Code |
|---|---|
| 5300X air regulator filter with BSP 1/4” US-Mil coupling | **10730305** |
| 5300X air regulator filter with BSP 1/4” Euro-Profile coupling | **10730308** |
| 5300X air regulator filter with BSP 1/4” Nitto (exclusive in Asia) coupling | **10730351** |

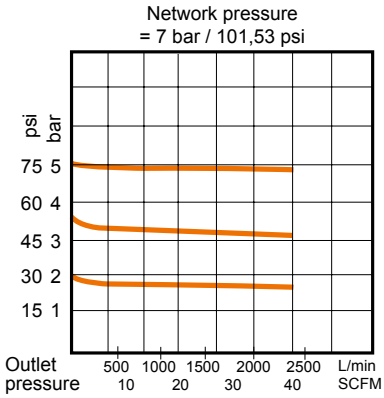


## Versatile modular system

If you need to upgrade your system from a standard filter to a coalescing system or upgrade to activated carbon, with the Sagola 5000X modular system you can easily upgrade with a conversion kit.

## Made to last with minimal maintenance

Manufactured from machined aluminum with stainless steel couplings, the Sagola 5000X range of filters are incredibly durable.

## Options

From pre-filters for moisture separation to coalescing filters to remove particles down to 0.01 microns or active carbon filters for breathing air.

The Sagola 5000X range is available in a number of models to meet the demands of any bodywork.

# 5000X range filters

## 5300X Plus Filter

Filter with the same technical and mechanical features as the 5300X model. Prepared for independent use of activated carbon filtering.

Double coalescing filter outlet for painting or blowing. Simple Active Carbon filter outlet for breathing or painted equipment.

Three filtered stages. Sinterised brass 8 microns pre filtration is incorporated, followed by a 0.01 micron Coalescent filter and final filtration by a wide surface active charcoal filter.

**REGULATIONS:**
2006/42/CE
ATEX Ex 2 II GX
UNE EN-13463-1

### TECHNICAL DATA

| | | | FILTRO 5300X PLUS |
|---|---|---|---|
| Weight | 6.8 Kilograms | | 14.99 lbs |
| Dimensions | 37.7 X 11.9 X 37.2 cm. | | 14.84 x 4.69 x 14.66 “ |
| Air flow at 7 bar (101 psi) | 2,870 L/min. | | 101 cfm |
| Air outlet connection | BSP 1/4” Female | Air intlet connection | BSP 1/2” Female |
| Filtering type (3 stages) | **1°** 8 µ Sinterised brass / **2°** 0.01 µ Coalescent filter / **3°** Active charcoal filter | | |
| Maximun working pressure | 12 bar | | 174 psi |
| Maximum working temperature | 90°C | | 194°F |
| Drain system | 1 Automatic drain + 2 Semi-automatic drain | | |

### VERSIONS

| Description | Code |
|---|---|
| 5300X Plus air regulator filter with BSP 1/4” US-Mil coupling | **10730306** |
| 5300X Plus air regulator filter with BSP 1/4” Euro-Profile coupling | **10730309** |
| 5300X Plus air regulator filter with BSP 1/4” Nitto (exclusive in Asia) coupling | **10730310** |

## Filter life controller

Offer a helpful visual reminder of maintenance programs of our filters. The timer is included in each filter kit.

Timer of **3 months**: Active charcoal filter

Timer of **6 months**: Sinterised brass and Coalescent filter.

The filters have a limited useful life in your filtration equipment. When filters become clogged, equipment performance can decrease. Therefore, we have no guarantee of 100% correct filtering.

*When you start using the filter you must press the “ON” button on the device.*

# 5000X range filters

## 5200X Filter

The 5200X model offers the highest technology for air filtering. Two stages of filtering.

Incorporates an 8 micron sinterised brass filter followed by a final 0.01 micron coalescent filter.

Automatic drain system and assisted regulator wheel.

Highly resistant and protective vessels. its draining system reduces maintenance costs due to its greater durability.

It carries out double filtration with optimum flow and pressure regulation, retention of water and impurities achieving an air purity of 99%.

**REGULATIONS:**
2006/42/CE
ATEX Ex 2 II GX
UNE EN-13463-1

## TECHNICAL DATA

| | | | 5200X FILTER |
|---|---|---|---|
| Weight | 4.7 Kilograms | | 10.36 lbs |
| Dimensions | 27.1 X 12.3 X 37.2 cm. | | 10.67 x 4.84 x 14.66 “ |
| Air flow at 7 bar (101 psi) | > 3,000 L/min. | | > 106 cfm |
| Air outlet connection | BSP 1/4” Female | Air inlet connection | BSP 1/2” Female |
| Filtering type (2 stages) | **1°** 8 µ Sinterised brass / **2°** 0.01 µ Coalescent filter | | |
| Maximun working pressure | 12 bar | | 174 psi |
| Maximum working temperature | 90°C | | 194°F |
| Drain system | 1 Automatic drain + 1 Semi-automatic drain | | |

## VERSIONS

| Description | Code |
|---|---|
| 5200X air regulator filter with BSP 1/4” US-Mil coupling | **10730304** |
| 5200X air regulator filter with BSP 1/4” Euro-Profile coupling | **10730307** |
| 5200X air regulator filter with BSP 1/4” Nitto (exclusive in Asia) coupling | **10730350** |

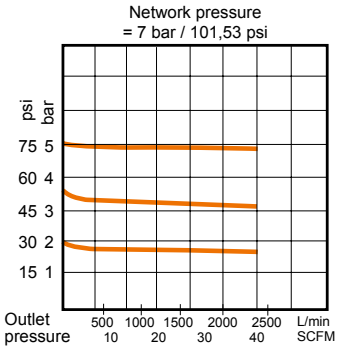


## How to change a filter

1. Unscrew lower section

2. Extract filter

3. Replace spare filter

4. Grease and place lower section

5. Place the timer

# 5000X range filters

## 5100X Filter

Air purifying filter with pressure regulator and pressure gauge.

Its vessel is tougher and more protective.

5100X filter comes with a new draining system which reduces maintenance costs due to its greater durability.

The filtering system retains water and impurities. Incorporates 8 micron sinterised filter.

## 5050X Filter

The 5050X model is an Purifier Filter with automatic drain system. Ideal for pre-filtering in industrial air lines. Incorporates 8 micron sinterised filter.

Line pre-filter for: medium compressor output (1/2" air inlet), mains level changes, booth input,...

## 5000X Filter

Purifier Filter with regulator, with a perfect price/quality ratio. Ideal for solvent basecoat paint booths and preparation areas.

The 5000X model features a semi-automatic drain system and dual air outlets.

Filtering system that retains water, oil and other impurities. Incorporates a 20 micron filter.

**REGULATIONS:**
2006/42/CE
ATEX Ex 2 II GX
UNE EN-13463-1

| TECHNICAL DATA | 5100X | | 5050X | | 5000X | |
|---|---|---|---|---|---|---|
| Weight | 2.64 Kg. | 5.82 lbs | 1.95 Kg. | 4.30 lbs | 2.3 Kg. | 5.07 lbs |
| Dimensions (cm.) | 15.9 x 12.3 x 37.3 cm. | | 11.4 x 11.9 x 33.9 cm. | | 14.8 x 11.9 x 38.4 cm. | |
| Dimensions (inchs) | 6.26 x 4.84 x 14.65" | | 4.49 x 4.69 x 13.35" | | 5.93 x 4.69 x 15.12" | |
| Air flow at 7 bar (101 psi) | > 3,000 L/min. | > 106 cfm | > 3,000 L/min. | > 106 cfm | > 3,000 L/min. | > 106 cfm |
| Air outlet connection | BSP 1/4" F | | BSP 1/4" F | | BSP 1/4" F | |
| Air inlet connection | BSP 1/2" F | | BSP 1/2" F | | BSP 1/2" F | |
| Filtering type | 8 µ Sinterised brass | | 8 µ Sinterised brass | | 20 µ Sinterised brass | |
| Maximun working pressure | 12 bar | 174 psi | 12 bar | 174 psi | 12 bar | 174 psi |
| Maximum working temperature | 90°C | 194°F | 90°C | 194°F | 90°C | 194°F |
| Drain system | Automatic drain | | Automatic drain | | Semi-automatic drain | |

| VERSIONS | 5100X | 5050X | 5000X |
|---|---|---|---|
| **Description** | **Code** | **Code** | **Code** |
| Air regulator filter<br>BSP 1/4" US-Mil coupling | **10730202** | **10720301** | **10730204** |
| Air regulator filter<br>BSP 1/4" Euro-Perfil coupling | **10730206** | **10720302** | **10730205** |
| Air regulator filter<br>BSP 1/4" Nitto (exclusive in Asia) coupling | **10730208** | **10720303** | **10730207** |

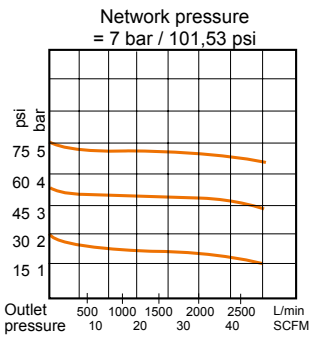

# 5000X range filters accessories

The filters have a limited useful life in your filtration equipment. When filters become clogged, equipment performance can decrease. Therefore, we have no guarantee of 100% correct filtering.

## 5000X filters Kit

Replacement filter kit for 5000X filters.
Includes timer.

| Code | Description |
|---|---|
| 56418719 | Sintered bronze filter kit |
| 56418071 | Coalescent filter Kit |
| 56418070 | Active Carbon filter kit |

*(Includes timer)*

## 5000X filters Kit

20 µ porous bronze filter.
Replacement for 5000X filter.

| Code |
|---|
| 56418720 |

## Gaskets Kit

| Code | Models |
|---|---|
| 56418537 | 5300X / 5300X+ |

## 5000X Manometer

High quality and precision
5000X manometer.

| Code |
|---|
| 54550016 |

## Double outlet Kit

Couplings US- Mil.

| Code |
|---|
| 56418704 |

## Filter life controller

Offer a helpful visual reminder of maintenance programs of our filters.

The timer is included in each filter kit.

- Timer of 3 months (Active charcoal filter)
- Timer of 6 months (Sinterised brass and Coalescent filter)

## Automatic drain Kit

| Code | Models |
|---|---|
| 56450010 | 5050X / 5100X / 5200X / 5300X / 5300X+ |

## Semi-automatic drain Kit

| Code | Models |
|---|---|
| 56418533 | 5000X |

## Displays 5000X filters range

| Code | Description |
|---|---|
| 70000005 | Display filter support 5100X |
| 70000006 | Display filter support 5300X / 5200X |

# 5000X range filters accessories

If you need to upgrade your system from a standard filter to a coalescing system or upgrade to activated carbon, with the Sagola 5000X modular system you can easily upgrade with a conversion pack.

## Coalescent filter coupling

Coupling to convert a 5100X to a 5200X filter.

The definitive solution to problems with solid particles. It incorporates a wide surface coalescent filter. Increase of efficiency up to 0.01 microns. Semi-automatic drain system (+ the automatic drain system of 5100X).

| Code |
|---|
| 56418521 |

## Active charcoal filter coupling

Coupling to convert a 5200X to a 5300X filter.

The best solution to problems of contaminating particles and organic fumes in the air network. It incorporates a wide surface active charcoal cartridge. Semi-automatic drain system (+ 2 drains coming with 5200X).

| Code |
|---|
| 56418520 |

## Air quality test equipment

Equipment for the detection of air impurities, humidity level and temperature. It incorporates air quality test equipment with inlet regulator, flashlight with magnifying glass of 30 magnification for visualization of impurities, humidity meter and digital temperature.

It incorporates membrane filter kit, pore 0.45µ (50 units).

| Code | Description |
|---|---|
| 15020001 | Air quality test Sagola case |
| 49000740 | Membrane filter kit. Pore 0.45 µ 50 units. |

# 5000X range filters

## Sagola 5300X filter Spare parts

The Sagola 5300X filter is covered by a **3-year** manufacturers warranty from SAGOLA.
Please follow the recommended housekeeping and maintenance procedure as prescribed in the operation manuals.

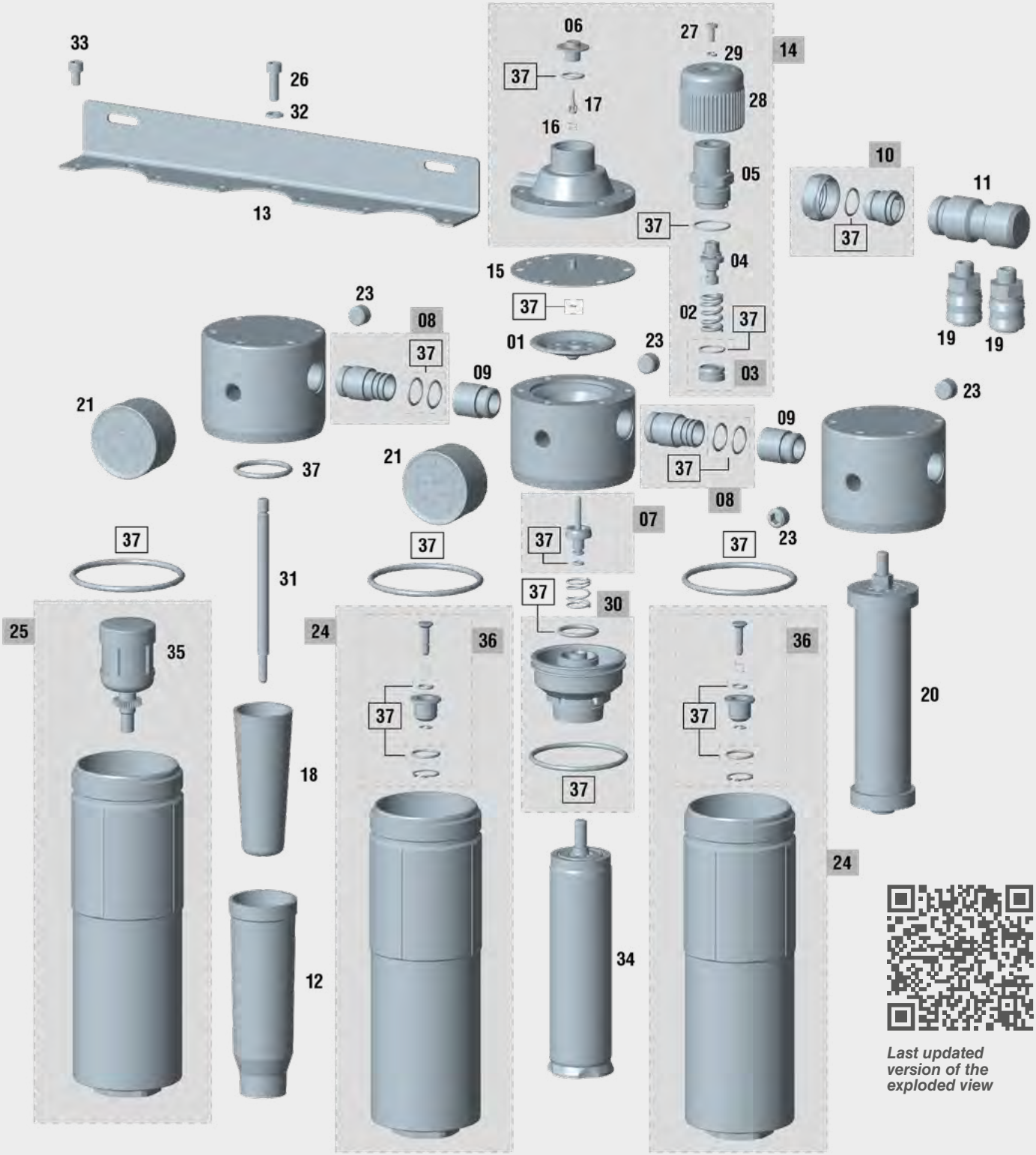


*Last updated version of the exploded view*

*This exploded view is not the material list of the filter*

# 5000X range filters

## Sagola 5300X filter Spare parts

### SPARE PARTS 5300X

| No. | Code | Description |
|---|---|---|
| 01 | 52910002 | Guide disc |
| 02 | 54710249 | Cylindrical spring 15 x 25 x 2.6 mm. |
| 03 | 56410034 | Piston |
| 04 | 56417903 | Regulator wheel |
| 05 | 52713019 | Control valve body-lid |
| 06 | 52910402 | Valve disc |
| 07 | 56417405 | Air valve |
| 08 | 56414914 | Connection 1/2” x14 F with joints |
| 09 | 55710234 | Connection 1/2” x14 M - special |
| 10 | 56410048 | Complete connection |
| 11 | 55710509 | Top connection 3/4” x14 M - 3/4” x14 M |
| 12 | 52713106 | Air deflector cup body |
| 13 | 53310207 | Bracket |
| 14 | 56410047 | Complete lid |
| 15 | 56418562 | Membrane + joint Kit |
| 16 | 54710206 | Cylindrical spring 6 x 8 x 0.5 mm. |
| 17 | 56417409 | Air valve |
| 18 | 56418719 | Sinterized brass filter 8 µ |
| 19 | 11010531 | Aluminium coupling BSPT 1/4” M -US-Mil |

### SPARE PARTS 5300X

| No. | Code | Description |
|---|---|---|
| 20 | 56418070 | Active Charcoal filter |
| 21 | 54550016 | Gauge 12 1/4” |
| 22 | 54710250 | Cylindrical spring 16.5 x 24 x 1.5 mm. |
| 23 | 55752117 | Top coupling 1/4” M DIN 906 S.steel |
| 24 | 56417704 | Vessel + Semi-automatic drain |
| 25 | 56417705 | Vessel + Automatic drain |
| 26 | 57250817 | Screw DIN 912 M 6 x 20 S.steel |
| 27 | 57251305 | Screw DIN 7985 M 4 x 10 zinc plated |
| 28 | 57810329 | Air pressure regulator wheel |
| 29 | 80860703 | Washer DIN 7980 4.1 blued |
| 30 | 56310611 | Bracket |
| 31 | 57211914 | Subjection pin |
| 32 | 50850402 | Washer DIN 125-B 6,4 zinc plated |
| 33 | 57250816 | Screw DIN 912 M 6 x10 S.steel |
| 34 | 56418071 | Coalescent filter |
| 35 | 56450010 | Automatic drain |
| 36 | 56418533 | Semi-automatic drain |
| 37 | 56418537 | Gasket Kit |

## 5000X range filters Kit

Replacement filter kit for the 5300X filter.
Includes timer. (see page 130)

**Sintered bronze filter kit**

**Coalescing filter kit**

**Active Carbon filter kit**

***Clean the filter correctly. Follow the cleaning steps in the instruction manual for proper operation of the equipment.***

# 5000X range filters

## Sagola 5300X Plus filter Spare parts

The Sagola 5300X Plus filter is covered by a **3-year** manufacturers warranty from SAGOLA.
Please follow the recommended housekeeping and maintenance procedure as prescribed in the operation manuals.

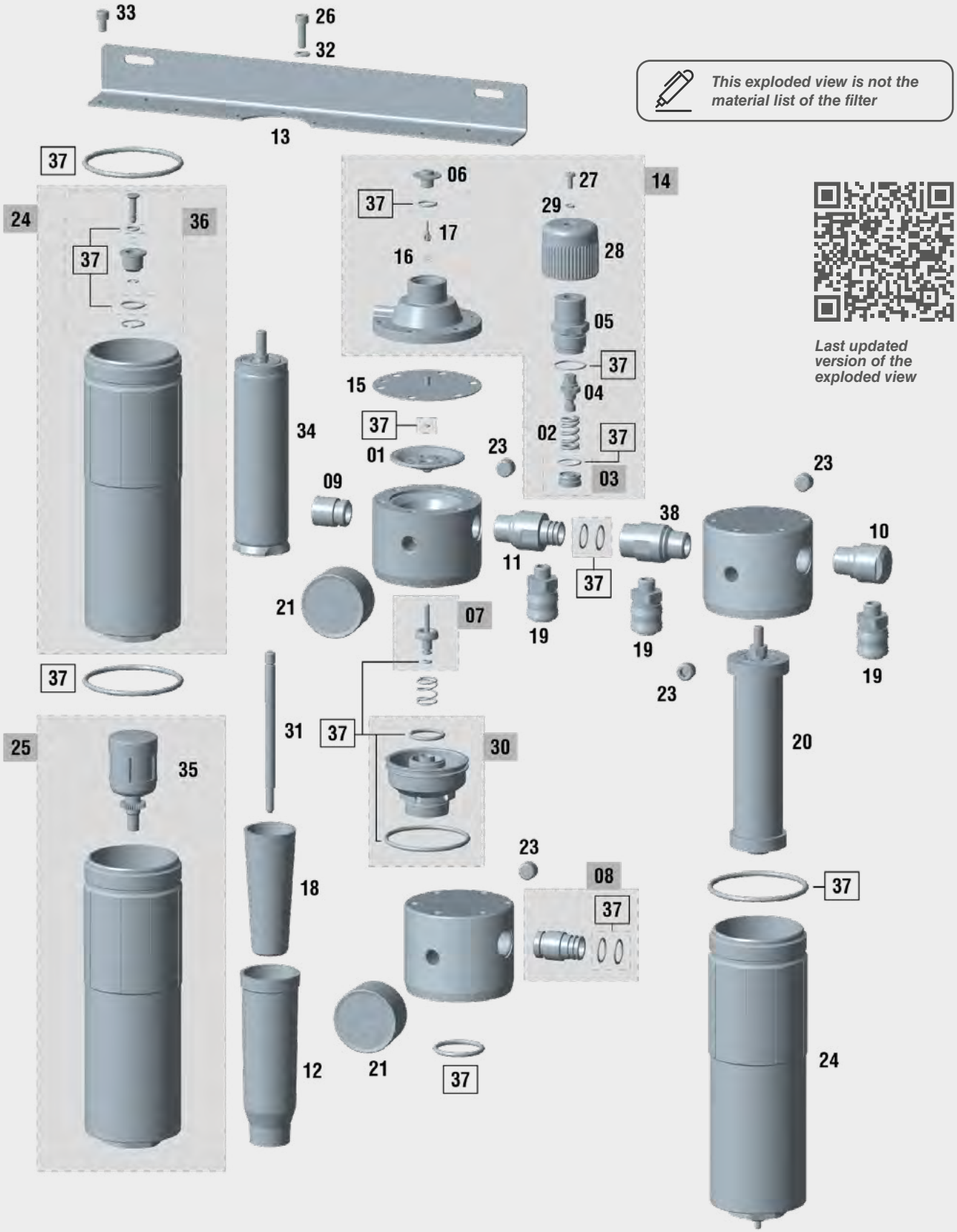


This exploded view is not the material list of the filter

Last updated version of the exploded view

# 5000X range filters

## Sagola 5300X Plus filter Spare parts

**SPARE PARTS** **5300X PLUS**

| No. | Code | Description |
|---|---|---|
| 01 | 52910002 | Guide disc |
| 02 | 54710249 | Cylindrical spring 15 x 25 x 2.6 mm. |
| 03 | 56410034 | Piston |
| 04 | 56417903 | Regulator wheel |
| 05 | 52713019 | Control valve body-lid |
| 06 | 52910402 | Valve disc |
| 07 | 56417405 | Air valve |
| 08 | 56414914 | Connection 1/2” x14 F with joints |
| 09 | 55710234 | Connection 1/2” x14 M - special |
| 10 | 55712165 | Top connection 1/2” x 14 M BSPT |
| 11 | 55710243 | Connection 1/2” x14 M - Special (Male) |
| 12 | 52713106 | Air deflector cup body |
| 13 | 53310215 | Bracket |
| 14 | 56410047 | Complete lid |
| 15 | 56418562 | Membrane + joint Kit |
| 16 | 54710206 | Cylindrical spring 6 x 8 x 0.5 mm. |
| 17 | 56417409 | Air valve |
| 18 | 56418719 | Sinterized brass filter 8 µ |
| 19 | 11010531 | Aluminium coupling BSPT 1/4” M -US-Mil |

**SPARE PARTS** **5300X PLUS**

| No. | Code | Description |
|---|---|---|
| 20 | 56418070 | Active Charcoal filter |
| 21 | 54550016 | Gauge 12 1/4” |
| 22 | 54710250 | Cylindrical spring 16.5 x 24 x 1.5 mm. |
| 23 | 55752117 | Top coupling 1/4” M DIN 906 S.steel |
| 24 | 56417704 | Vessel + Semi-automatic drain |
| 25 | 56417705 | Vessel + Automatic drain |
| 26 | 57250817 | Screw DIN 912 M 6 x 20 S.steel |
| 27 | 57251305 | Screw DIN 7985 M 4 x 10 zinc plated |
| 28 | 57810329 | Air pressure regulator wheel |
| 29 | 80860703 | Washer DIN 7980 4.1 blued |
| 30 | 56310611 | Bracket |
| 31 | 57211914 | Subjection pin |
| 32 | 50850402 | Washer DIN 125-B 6.4 zinc plated |
| 33 | 57250816 | Screw DIN 912 M 6 x10 S.steel |
| 34 | 56418071 | Coalescent filter |
| 35 | 56450010 | Automatic drain |
| 36 | 56418533 | Semi-automatic drain |
| 37 | 56418537 | Gasket Kit |
| 38 | 55710244 | Connection 1/2” x14 M - Special (Female) |

## 5000X range filters Kit

Replacement filter kit for the 5300X Plus filter.
Includes timer. (see page 130)

**Sintered bronze filter kit**

**Coalescing filter kit**

**Active Carbon filter kit**

***Clean the filter correctly. Follow the cleaning steps in the instruction manual for proper operation of the equipment.***

# 5000X range filters

## Sagola 5200X filter Spare parts

The Sagola 5200X filter is covered by a **3-year** manufacturers warranty from SAGOLA.
Please follow the recommended housekeeping and maintenance procedure as prescribed in the operation manuals.

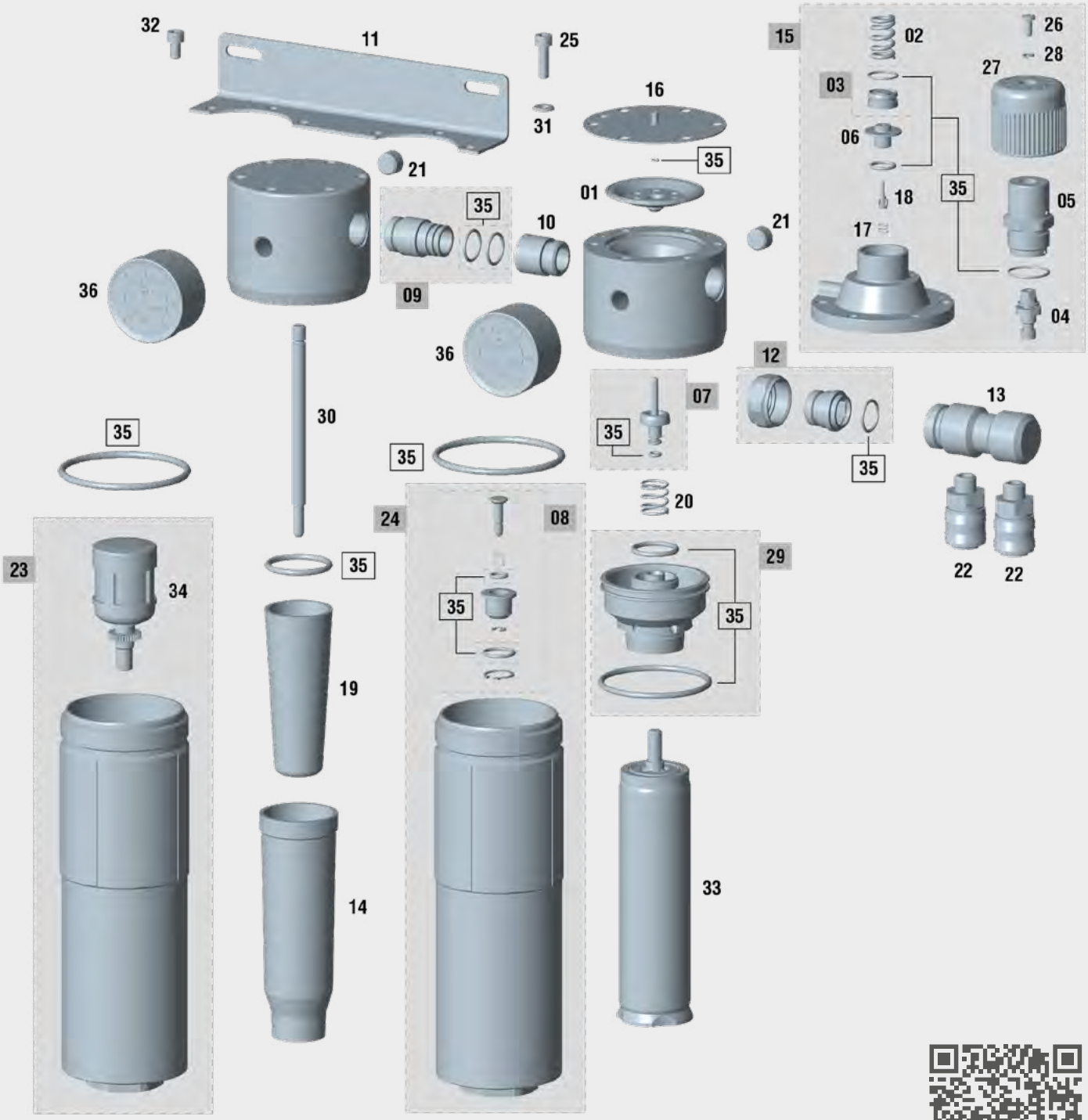


*This exploded view is not the material list of the filter*

*Last updated version of the exploded view*

# 5000X range filters

## Sagola 5200X filter Spare parts

| SPARE PARTS | | 5200X |
|---|---|---|
| No. | Code | Description |
| 01 | 52910002 | Guide disc |
| 02 | 54710249 | Cylindrical spring 15 x 25 x 2.6 mm. |
| 03 | 56410034 | Piston |
| 04 | 56417903 | Regulator wheel |
| 05 | 52713019 | Control valve body-lid |
| 06 | 52910402 | Valve disc |
| 07 | 56417405 | Air valve |
| 08 | 56418533 | Semi-automatic drain |
| 09 | 56414914 | Connection 1/2” x14 F with joints |
| 10 | 55710234 | Connection 1/2” x14 M - special |
| 11 | 53310206 | Bracket |
| 12 | 56410048 | Coupling Kit |
| 13 | 55710509 | Top connection 3/4” x 14 M - 3/4” x 14 M |
| 14 | 52713106 | Air deflector cup body |
| 15 | 56410047 | Complete lid |
| 16 | 56418562 | Membrane + joint Kit |
| 17 | 54710206 | Cylindrical spring 6 x 8 x 0.5 mm. |
| 18 | 56417409 | Air valve |

| SPARE PARTS | | 5200X |
|---|---|---|
| No. | Code | Description |
| 19 | 56418719 | Sinterized brass filter 8 µ |
| 20 | 54710250 | Cylindrical spring 16.5 x 24 x 1.5 mm. |
| 21 | 55752117 | Top coupling 1/4” M DIN 906 S.steel |
| 22 | 11010531 | Aluminium coupling BSPT 1/4” M -US-Mil |
| 23 | 56417705 | Vessel + Automatic drain |
| 24 | 56417704 | Vessel + Semi-automatic drain |
| 25 | 57250817 | Screw DIN 912 M 6 x 20 S.steel |
| 26 | 57251305 | Screw DIN 7985 M 4 x 10 zinc plated |
| 27 | 57810339 | Air pressure regulator wheel |
| 28 | 80860703 | Washer DIN 7980 4.1 blued |
| 29 | 56310611 | Bracket |
| 30 | 57211914 | Subjection pin |
| 31 | 50850402 | Washer DIN 125-B 6.4 zinc plated |
| 32 | 57250816 | Screw DIN 912 M 6 x10 S.steel |
| 33 | 56418071 | Coalescent filter |
| 34 | 56450010 | Automatic drain |
| 35 | 56418536 | Gasket Kit |
| 36 | 54550016 | Gauge 12 1/4” |

## 5000X range filters Kit

Replacement filter kit for the 5200X filter.
Includes timer. (see page 130)

**Sintered bronze filter kit**

**Coalescing filter kit**

***Clean the filter correctly. Follow the cleaning steps in the instruction manual for proper operation of the equipment.***

# 5000X range filters

## Sagola 5100X filter Spare parts

The Sagola 5100X filter is covered by a **3-year** manufacturers warranty from SAGOLA.
Please follow the recommended housekeeping and maintenance procedure as prescribed in the operation manuals.

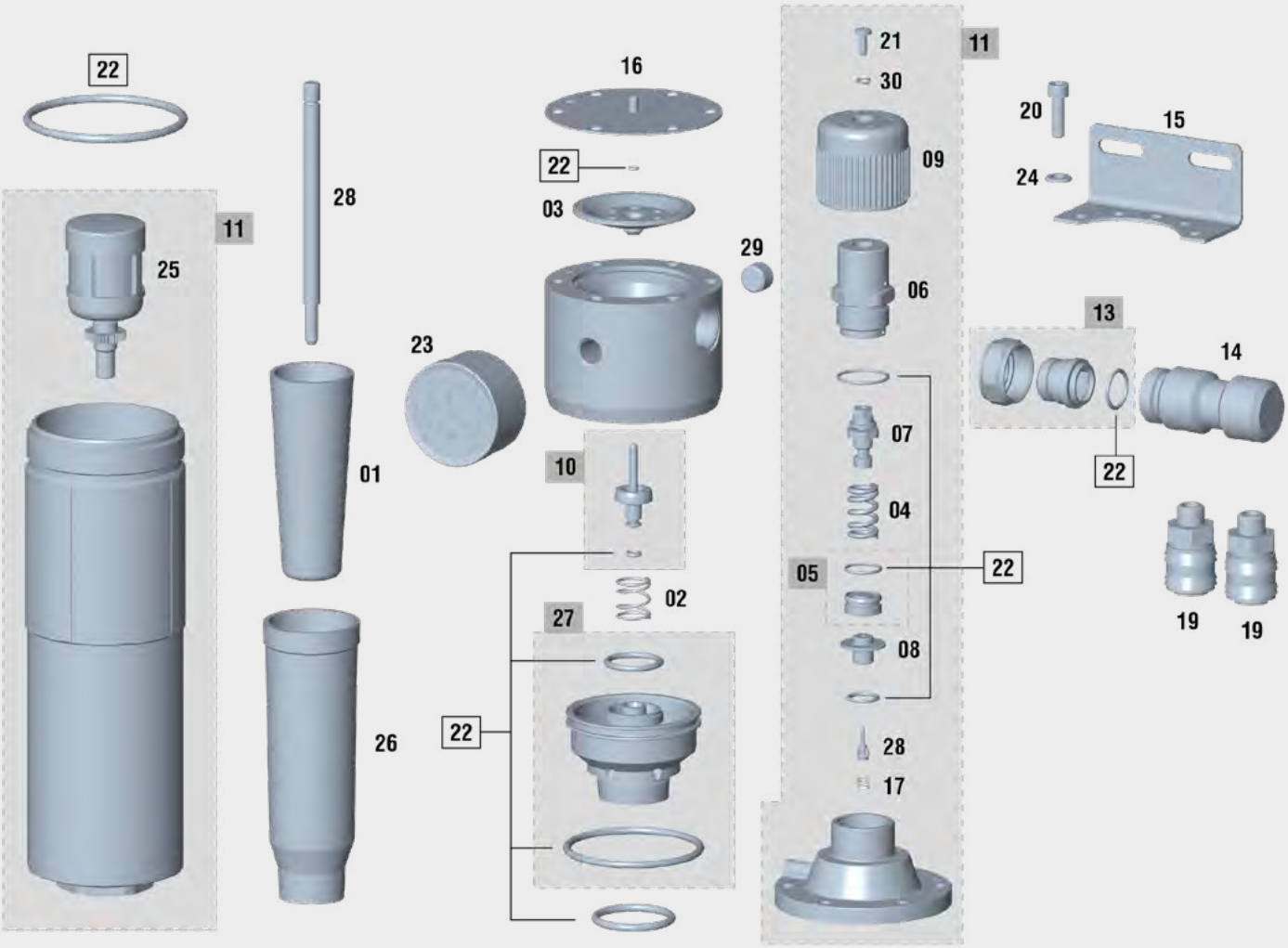


*This exploded view is not the material list of the filter*

*Last updated version of the exploded view*

# 5000X range filters

## Sagola 5100X filter Spare parts

### SPARE PARTS 5100X

| No. | Code | Description |
|---|---|---|
| 01 | 56418719 | Sinterized brass filter 8 µ |
| 02 | 54710250 | Cylindrical spring 16.5 x 24 x 1.5 mm. |
| 03 | 52910002 | Guide disc |
| 04 | 54710249 | Cylindrical spring 15 x 25 x 2.6 mm. |
| 05 | 56410034 | Piston |
| 06 | 52713019 | Control valve body-lid |
| 07 | 56417903 | Regulator wheel |
| 08 | 52910402 | Valve disc |
| 09 | 57810339 | Regulator wheel |
| 10 | 56417405 | Air valve |
| 11 | 56417705 | Vessel + Automatic drain |
| 12 | 56410047 | Complete lid |
| 13 | 56410048 | Coupling Kit |
| 14 | 55710509 | Top connection 3/4” x 14 M - 3/4” x 14 M |
| 15 | 53310205 | Bracket |

### SPARE PARTS 5100X

| No. | Code | Description |
|---|---|---|
| 16 | 56418562 | Membrane + joint Kit |
| 17 | 54710206 | Cylindrical spring 6 x 8 x 0.5 mm. |
| 18 | 56417409 | Air valve |
| 19 | 11010531 | Aluminium coupling BSPT 1/4” M -US-Mil |
| 20 | 57250817 | Screw DIN 912 M 6 x 20 S.steel |
| 21 | 57251305 | Screw DIN 7985 M 4 x 10 zinc plated |
| 22 | 56418535 | Gasket Kit |
| 23 | 54550016 | Gauge 12 1/4” |
| 24 | 50850402 | Washer DIN 125-B 6.4 zinc plated |
| 25 | 56450010 | Automatic drain |
| 26 | 52713106 | Air deflector cup body |
| 27 | 56310611 | Bracket |
| 28 | 57211914 | Subjection pin |
| 29 | 55752117 | Top connection 1/4” M DIN 906 S.steel |
| 30 | 80860703 | Washer DIN 7980 4.1 blued |

## 5000X range filters Kit

Replacement filter kit for the 5100X filter.
Includes timer. (see page 130)

**Sintered bronze filter kit**

***Clean the filter correctly. Follow the cleaning steps in the instruction manual for proper operation of the equipment.***

# 5000X range filters

## Sagola 5050X filter Spare parts

The Sagola 5050X filter is covered by a **3-year** manufacturers warranty from SAGOLA.
Please follow the recommended housekeeping and maintenance procedure as prescribed in the operation manuals.

## 5000X range filters Kit

Replacement filter kit for the 5050X filter. Includes timer. (see page 130)

Sintered bronze filter kit

*This exploded view is not the material list of the filter*

*Last updated version of the exploded view*

### SPARE PARTS 5050X

| No. | Code | Description |
|---|---|---|
| 01 | 56418719 | Sinterized brass filter 8 µ |
| 02 | 56417705 | Vessel + Automatic drain |
| 03 | 55712165 | Top connection 1/2” x 14 M BSPT |
| 04 | 53310205 | Bracket |
| 05 | 57250816 | Screw DIN 912 M 6 x10 S.steel |
| 06 | 11010531 | Aluminium coupling BSPT 1/4” M -US-Mil |

### SPARE PARTS 5050X

| No. | Code | Description |
|---|---|---|
| 07 | 56418534 | Gasket Kit |
| 08 | 54550016 | Gauge 12 1/4” |
| 09 | 56450010 | Automatic drain |
| 10 | 52713106 | Air deflector cup body |
| 11 | 57211914 | Subjection pin |
| 12 | 55752117 | Top coupling 1/4” M DIN 906 S.steel |

# 5000X range filters

## Sagola 5000X filter Spare parts

The Sagola 5000X filter is covered by a **3-year** manufacturers warranty from SAGOLA.
Please follow the recommended housekeeping and maintenance procedure as prescribed in the operation manuals.

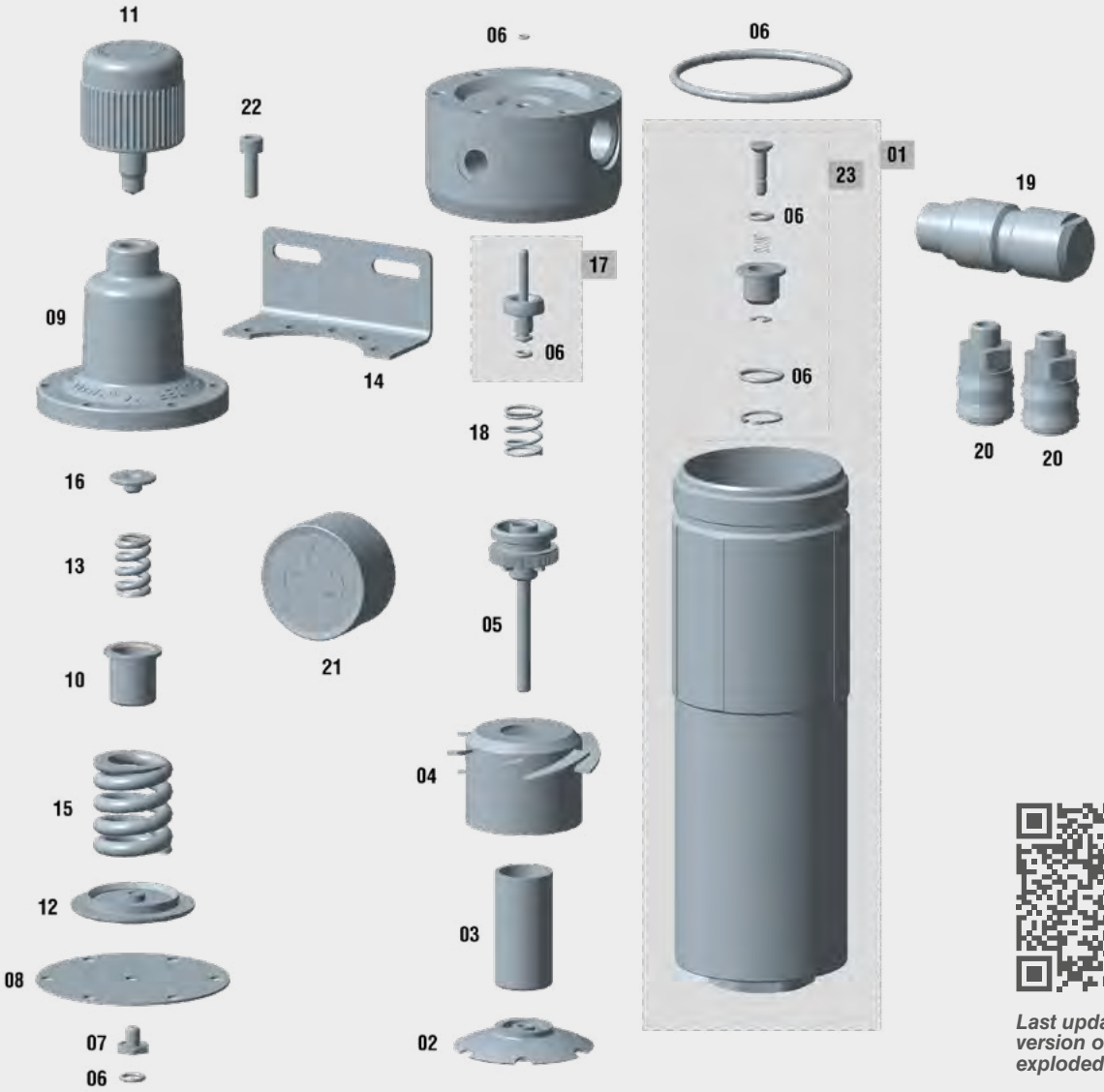


*Last updated version of the exploded view*

### SPARE PARTS 5000X

| No. | Code | Description |
|---|---|---|
| 01 | 56417704 | Vessel + Semi-automatic drain |
| 02 | 57411202 | Filter Subjection nut |
| 03 | 56418720 | Porous bronze filter 20 µ |
| 04 | 52713103 | Air deflector cup body |
| 05 | 56310604 | Bracket |
| 06 | 56418532 | Gasket Kit |
| 07 | 57210101 | Membrane fastening screw |
| 08 | 54610302 | Regulator membrane |
| 09 | 57110202 | Regulator bell lid |
| 10 | 56310011 | Spring support pan |
| 11 | 57810341 | Air pressure regulator wheel with shaft |
| 12 | 50810016 | Membrane support washer |

### SPARE PARTS 5000X

| No. | Code | Description |
|---|---|---|
| 13 | 54710245 | Cylindrical spring 15.5 x 24.1 x 3.5 mm. |
| 14 | 53310202 | Bracket |
| 15 | 54710263 | Cylindrical spring 34 x 40 x 6.5 mm. |
| 16 | 51911518 | Top bushing - Push spring |
| 17 | 56417405 | Air valve |
| 18 | 54710250 | Cylindrical spring 16.5 x 24 x 1.5 mm. |
| 19 | 55712175 | Top coupling 1/2” x 14 M BSPT |
| 20 | 11010531 | Aluminium coupling BSPT 1/4” M -US-Mil |
| 21 | 54550016 | Gauge 12 1/4” |
| 22 | 57250817 | Screw DIN 912 M 6 x20 S.steel |
| 23 | 56418533 | Semi-automatic drain |

# Pack 6000X Air Heater

The **Sagola Pack 6000X Air Heater** system heats compressed air to a constant working temperature to ensure a stable painting process and a reduction in dew point temperature.

Maximum air quality all year round. Regardless of environmental conditions, the Pack 6000X Air Heater supplies compressed air used in painting processes at a constant temperature, even when there are large temperature differences between day and night, winter and summer.

Heating the compressed air reduces its relative humidity avoiding condensation problems in cold and humid climates.

The use of this equipment provides a finish of optimum surface quality. Maintains a constant temperature in the compressed air, as required for the application of certain types of products.

**REGULATIONS:**
89/392/CE
2006/95 CE, 2006/42 CS & 2004/108 CE

## TECHNICAL DATA

| | | PACK 6000X | |
|---|---|---|---|
| Weight | | 3.6 Kg. | 7.4 lbs |
| Dimensions | | 40,5 X 9,2 X 25,5 cm. | 15.9 x 3.6 x 10.04“ |
| Maximum air flow at 7 bar | | 750 L/min. | 26.48 cfm |
| Maximun working pressure | | 12 bar | 174 psi |
| Maximum electrical consumption | | 800 w | |
| Power | | 240V/50Hz - 110V/60Hz | |
| Working temperature range | Clearcoats | 40-60°C | 104-140°F |
| | Waterborne | 30-50°C | 86-122°F |
| | Solvent basecoats | 30-40°C | 86-104°F |

## VERSIONS / ACCESSORIES

| Description | Code |
|---|---|
| Sagola Pack 6000X Air Heater 220V - 50Hz | **10780102** |
| Sagola Pack 6000X Air Heater 110V - 60Hz | **10780104** |
| 11 m. Heated air hose Ø10 x 18 mm. 220V - 50Hz | **56414030** |
| 11 m. Heated air hose Ø10 x 18 mm. 110V - 60Hz | **56414031** |

## Easy to use

Light, small and easy to install. The Pack 6000X is equipped with a digital PID temperature controller and a push button LED display with red and green indicators to identify when the selected temperature has been reached.

## Cool Touch case

Cold air enters the pressurized chamber cooling the outer casing of the equipment, keeping it isolated from the hot chamber inside, ensuring the Pack 6000X is safe to the touch.

# Pack 6000X Air Heater

## Air heater main parts

**01** **CONTROLS**

**02** **NETWORK SWITCH**

**03** **RED LED PILOT (Heating)**

**03** **GREEN LED PILOT (Ready)**

**04** **TEMPERATURE SENSOR**

**05** **FLOW SWITCH**

**06** **COLD AIR CHAMBER** (Unpressurized)

**07** **HOT AIR CHAMBER** (Pressurized)

**08** **AIR INLET** (from network or filter)

**09** **AIR OUTLET** (to hose)

**10** **ELECTRIC CONNECTION** (Heated hose)

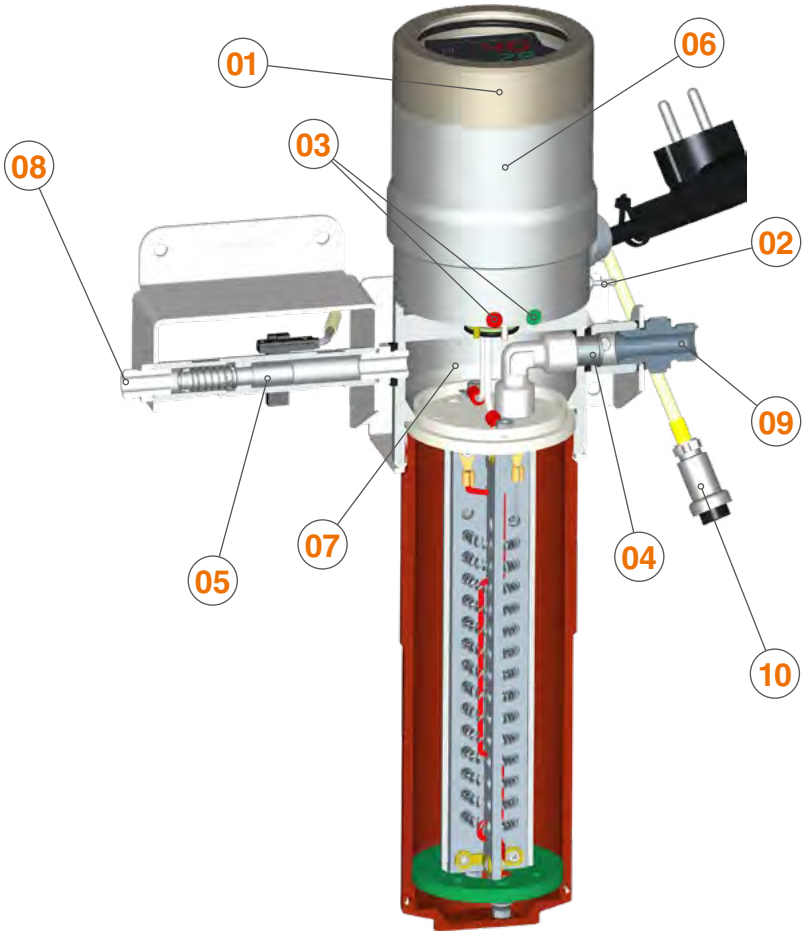


**Digital temperature display PID**

**Termopar Temperature sensor**

**Self-learning function**

**Overheating protection**

**Automatic activation by flow switch**

## Pack 6000X Air Heater Advantages

- Temperature stability both in the compressed air and the final painting elements such as hose and spray gun.
- Stable painting process in areas with large temperature changes between day and night, winter and summer.
- Constant working temperature.
- Compact and robust.
- Digital temperature display.
- Cold touch, thermal insulation.
- Easy to use; power button and temperature controller.
- Out of the cabin installation.
- Right temperature in the spray gun almost immediately.

Incluye una manguera calefactada aislada para obtener el máximo rendimiento energético.

*Heated hose system. Independent of ambient temperature.*

*The Sagola Pack 6000X is supplied with a specially designed heated antistatic hose to prevent heat loss from the air before it reaches the aircap.*

*Digital temperature display*

# 4000 range filters

# Quality filtering

**Effective solution for filtering compressed air in professional paint booths**

The **Sagola 4000 air filtration** system is the effective solution for filtering compressed air in professional paint booths for: car repainting, wood, machinery, plastics and industry in general.

In order to choose the filter system we shall install in our shop, we must take into account the type of air compressor we have, its condition and the quality of the air it is supplying.

In case we are looking for a high quality filtration of particles, water and oil, for painting in a booth and to get a good finish, the filter 4120 would be suitable for primers, lacquers, clearcoats and enamels.

To get the highest performance and finishing quality with waterborne paints and High Solid (HS) products, we may need even more pure air that contains no particles at all.

In that case we have to install a coalescent filter and regulator, that is, the 4220. With this filter system we will eliminate any solid particle down to 0.01 microns, water aerosols (C>0.01 mg/m³) and oil aerosols (C>0.01 mg/m³).

Air filters designed and developed for new car painting technologies. Ideal for waterborne and HS paints.

## Accessories for 4000 range filters

### Sintered bronze filter 20 µ

| Code | Models |
|---|---|
| 56418721 | 4120/4220 |

### Coalescent filter

| Code | Model |
|---|---|
| 56418722 | 4220 |

### Double outlet kit

| Code | Models |
|---|---|
| 56418704 | 4120/4220 |

### Automatic drain kit

| Code | Model |
|---|---|
| 56450010 | 4220 |

### Semi-automatic drain kit

| Code | Models |
|---|---|
| 56418533 | 4120/4220 |

### Display

| Code | Model |
|---|---|
| 70000007 | 4220 |

### Gasket Kit

| Code | Model |
|---|---|
| 56418587 | 4120 |
| 56418588 | 4220 |

### Vessel + automatic drain kit

| Code | Model |
|---|---|
| 56417711 | 4120 |
| 56417712 | 4220 |

# 4000 range filters

## Maximum air quality

Professional line of air filters and regulators that offers maximum filtration, good performance and resistance, with the best price/quality ratio. The SAGOLA 4000 range removes humidity and oil down to 0.01 microns and ensures minimal air pressure drop (maximum airflow: 1,700 L/min.)

## Precision control

Easy to read pressure gauge with double scale, in bar and psi. High-precision regulation system with a large regulation handle. This makes it easy to handle, even with gloved hands.

## Reliable and easy to maintain

Made of machined aluminum with an anticorrosive treatment on the entire surface. The 4000 filter range is highly durable and requires minimal maintenance.

## Automatic drain system

The combination of automatic drain in the first stage and semi-automatic in the second means that the level of condensate inside the filter is kept at very low levels.

## Complete 4000 Series Filtration System

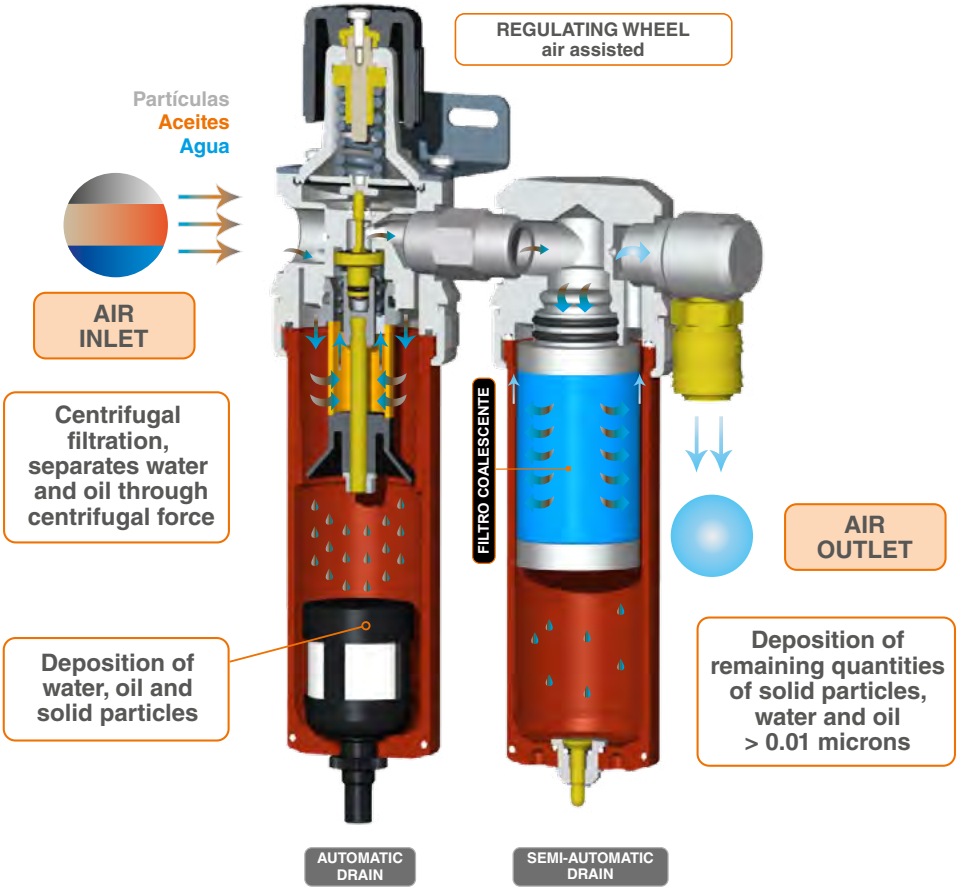

*Easy and simple to use. Tool-free disassembly.*

*Automatic drain system. Automatic drain of condensed liquids without manipulation.*

*High quality, easy to read manometer. Scale in bar and psi.*

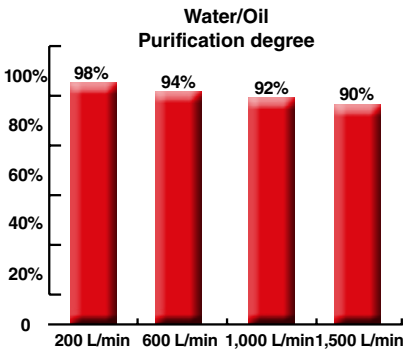


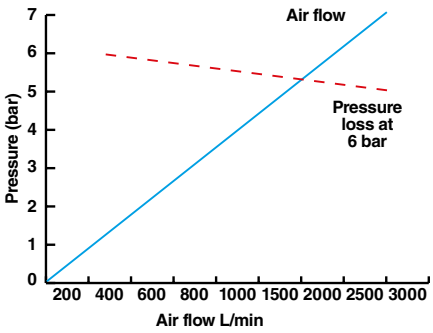

# 4000 range filters

## 4220 Plus Filter

Two stage air filter. Maximum filtering level. Recommended for last generation finishes. Waterborne paints, HS clear-coats and enamels, high gloss lacquers.

Highly reliable air regulation system. Regulating wheel for a better fit, even with gloves.

Manufactured from a solid aluminum block. Very robust, but light.

1st Stage. Filtration of water, oil and particles + 2nd Stage Submicron Filtering. 0.01 Microns.

Incorporates automatic purge of condensed liquids. High air flow.

Quality pressure gauge and easy to read.

**REGULATIONS:**
2006/42/CE
ATEX Ex 2 II GX
UNE EN-13463-1

### TECHNICAL DATA — 4220 / 4220 PLUS FILTER

| | | |
|---|---|---|
| Weight (with quick coupling) | 2 Kg. | 4.4 lbs |
| Weight (without quick coupling) | 1.8 Kg. | 3.96 lbs |
| Dimensions (without quick coupling) | 17.8 X 11.7 X 27.9 cm. | 7.01 x 4.61 x 10.98“ |
| Air flow | 2,415 L/min. | 85 cfm |
| Air outlet connection | BSP 1/4” Female | |
| Air inlet connection | BSP 1/2” Female | |
| Filtering type (2 stages) | **1st** 20 µ Bronze filter / **2nd** 0.01 µ Coalescent filter | |
| Maximun working pressure | 12 bar | 174 psi |
| Maximum working temperature | 90°C | 194°F |
| Drain system | 1 Automatic drain + 1 Semi-automatic drain | |

### VERSIONS

| Description | Code |
|---|---|
| 4220 Air regulator filter | **10750401** |
| 4220 Plus Air regulator filter with BSP 1/4” US-Mil coupling | **10750402** |
| 4220 Plus Air regulator filter with BSP 1/4” Euro-Profile coupling | **10750404** |
| 4220 Plus Air regulator filter with BSP 1/4” Nitto coupling (exclusive in Asia) | **10750403** |

## Quick couplings and connectors

Made of tempered steel with nitrile butadiene gasket, safe and hermetic closing system. Available in Euro-profile, US-Mil, Multi-profile and Nitto systems. Silicone-free joints. (See page 162)

## Antistatic air hoses

Highly flexible and lightweight antistatic hose. Fastening hardware for maximum security. 8mm inner diameter, enough for any spraygun model. (See page 160)

# 4000 range filters

## 4120 / 4120 Plus Filter

Effective solution for compressed air filtration in professional paint booths for: car refinish, wood, machinery, plastics and industry in general.

Highly reliable air regulation system. Regulating wheel for a better fit, even with gloves.

Manufactured from a solid aluminum block. Very robust, but light.

Incorporates automatic purge of condensed liquids. High air flow. High quality manometer.

Water, oil and particulate removal by 20 micron sintered bronze filter. Friction and centrifugation filtering.

**REGULATIONS:**
2006/42/CE
ATEX Ex 2 II GX
UNE EN-13463-1

### TECHNICAL DATA

| | 4120 / 4120 PLUS FILTER | |
|---|---|---|
| Weight (with quick coupling) | 1.22 Kg. | 2.69 lbs |
| Weight (without quick coupling) | 1.015 Kg. | 2.24 lbs |
| Dimensions (without quick coupling) | 9.7 X 11.7 X 27.9 cm. | 3.82 x 4.61 x 10.98“ |
| Air flow | 2,910 L/min. | 103 cfm |
| Air outlet connection | BSP 1/4” Female | |
| Air inlet connection | BSP 1/2” Female | |
| Filtering type | **1st** 20 µ Bronze filter | |
| Maximun working pressure | 12 bar | 174 psi |
| Maximum working temperature | 90°C | 194°F |
| Drain system | Automatic drain | |

### VERSIONS

| Description | Code |
|---|---|
| 4120 Air regulator filter | **10730501** |
| 4120 Plus Air regulator filter with BSP 1/4” US-Mil coupling | **10730502** |
| 4120 Plus Air regulator filter with BSP 1/4” Euro-Profile coupling | **10730504** |
| 4120 Plus Air regulator filter with BSP 1/4” Nitto coupling (exclusive in Asia) | **10730503** |

## Mechanized body from solid aluminum

No diecast parts inside. High strength elements. Longer durability. Oversized air holes, bigger air flow and minimum pressure drops.

## Machined aluminum vessel

High resistance anodized. Maximum durability. Minimum maintenance.

## Oversized regulating wheel

Easy to use, even with gloves.

## Anodized to avoid rusting

Not painted. Anodizing makes it to last longer. Very high resistance to rusting and any other chemical attack.

## High quality and easy to read manometer

Double scale: bar and psi.

## Automatic draining system

Automatic drain of condensed liquids without any handling.

# 4000 range filters

## Sagola 4220 Plus filter Spare parts

The Sagola 4220 Plus filter is covered by a **3-year** manufacturers warranty from SAGOLA.
Please follow the recommended housekeeping and maintenance procedure as prescribed in the operation manuals.

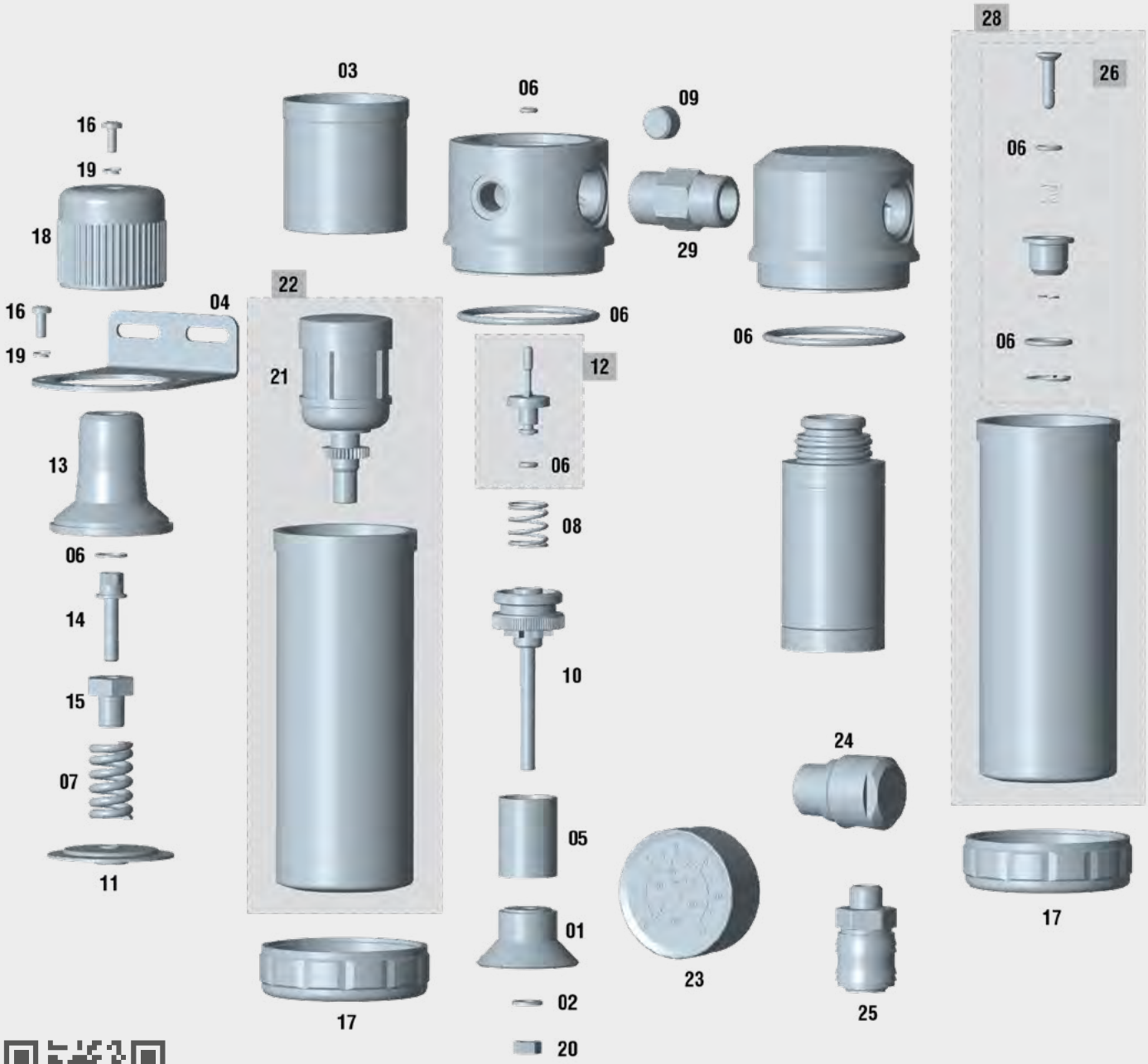


*Last updated version of the exploded view*

*This exploded view is not the material list of the filter*

# 4000 range filters

## Sagola 4220 Plus filter Spare parts

**SPARE PARTS** **4220 PLUS**

| No. | Code | Description |
|---|---|---|
| 01 | 50810028 | Air deflector washer |
| 02 | 50850408 | Washer DIN 125 6.4 S. steel |
| 03 | 51910719 | Vessel insert bushing |
| 04 | 53310211 | Bracket |
| 05 | 53610208 | 24 µ Sintered bronze filter |
| 06 | 56418588 | Gasket Kit |
| 07 | 54710281 | Cylindrical spring 18 x 31 x 3.5 mm. |
| 08 | 54710283 | Cylindrical spring 12 x 22 x 1.9 mm. |
| 09 | 55752117 | Top coupling 1/4” M DIN 906 S. steel |
| 10 | 56310604 | Support |
| 11 | 56414305 | Membrane |
| 12 | 56417416 | Air valve |
| 13 | 57110205 | Regulator bell lid |
| 14 | 57212310 | Regulation screw |
| 15 | 57212311 | Regulation nut |

**SPARE PARTS** **4220 PLUS**

| No. | Code | Description |
|---|---|---|
| 16 | 57251305 | Screw DIN 7985 M4x10 zinc plated |
| 17 | 57410109 | Vessel fastening nut |
| 18 | 57810339 | Pressure regulator wheel |
| 19 | 80860703 | Washer DIN 7980 4.1 blued |
| 20 | 57450905 | Nut DIN 934 M6x100 S. steel |
| 21 | 56450010 | Automatic drain |
| 22 | 56417711 | Vessel + Automatic drain |
| 23 | 54550016 | Gauge 12 1/4” |
| 24 | 55712165 | Top coupling 1/2” x14 M BSPT |
| 25 | 11010531 | Aluminium coupling BSPT 1/4” M -US-Mil |
| 26 | 56418533 | Semi-automatic drain |
| 27 | 56418722 | Coalescent filter |
| 28 | 56417712 | Vessel + Semi-automatic drain |
| 29 | 55710247 | Coupling 1/2” x 14 M - 1/2” x14 M |

***Clean the filter correctly. Follow the cleaning steps in the instruction manual for proper operation of the equipment.***

## 4000 Series filter Kit

Replacement filter kit for the 4220/4220 Plus filter.

**Coalescing filter kit**

**Sintered bronze filter kit 20 µ**

# 4000 range filters

## Sagola 4120 Plus filter Spare parts

The Sagola 4120 Plus filter is covered by a **3-year** manufacturers warranty from SAGOLA.
Please follow the recommended housekeeping and maintenance procedure as prescribed in the operation manuals.

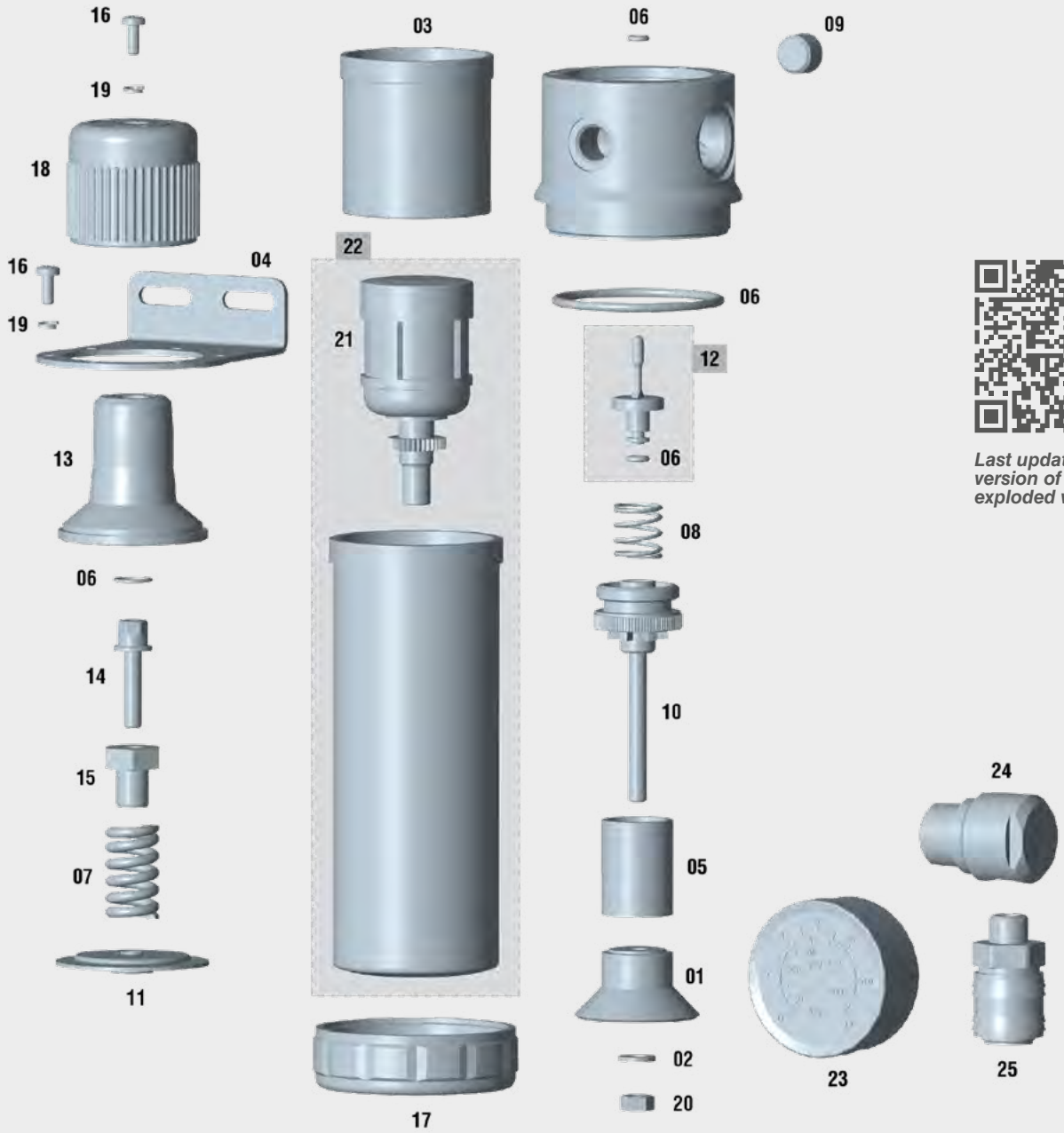


*Last updated version of the exploded view*

*This exploded view is not the material list of the filter*

# 4000 range filters

## Sagola 4120 Plus filter Spare parts

**SPARE PARTS** **4120 PLUS**

| No. | Code | Description |
|---|---|---|
| 01 | 50810028 | Air deflector washer |
| 02 | 50850408 | Washer DIN 125 6.4 S. steel |
| 03 | 51910719 | Vessel insert bushing |
| 04 | 53310211 | Bracket |
| 05 | 56418721 | 24 µ Sintered bronze filter |
| 06 | 56418588 | Gasket Kit |
| 07 | 54710281 | Cylindrical spring 18 x 31 x 3.5 mm. |
| 08 | 54710283 | Cylindrical spring 12 x 22 x 1.9 mm. |
| 09 | 55752117 | Top coupling 1/4” M DIN 906 S. steel |
| 10 | 56310604 | Support |
| 11 | 56414305 | Membrane |
| 12 | 56417416 | Air valve |
| 13 | 57110205 | Regulator bell lid |
| 14 | 57212310 | Regulation screw |
| 15 | 57212311 | Regulation nut |

**SPARE PARTS** **4120 PLUS**

| No. | Code | Description |
|---|---|---|
| 16 | 57251305 | Screw DIN 7985 M4x10 zinc plated |
| 17 | 57410109 | Vessel fastening nut |
| 18 | 57810339 | Pressure regulator wheel |
| 19 | 80860703 | Washer DIN 7980 4.1 blued |
| 20 | 57450905 | Nut DIN 934 M6x100 S. steel |
| 21 | 56450010 | Automatic drain |
| 22 | 56417711 | Vessel + Automatic drain |
| 23 | 54550016 | Gauge 12 1/4” |
| 24 | 55712165 | Top coupling 1/2” x14 M BSPT |
| 25 | 11010531 | Aluminium coupling BSPT 1/4” M -US-Mil |

***Clean the filter correctly. Follow the cleaning steps in the instruction manual for proper operation of the equipment.***

## 4000 Series filter Kit

Replacement filter kit for the 4120/4120 Plus filter.

**Sintered bronze filter kit 20 µ**

# Plus range filters

Sagola professional range in regulators, air purifiers, and air lubricators. Plus range has been exclusively designed and manufactured for professional use, it gathers high standard in performance and design.

## Solid and mecanized aluminium body

We do not use cast parts. Sturdy elements. High durability. Over air paths size offering higher flow and minimum pressure drop.

## Anodising treatment against oxidation

Painting to protect elements is avoided. This gives us endless life. Very high resistance to oxidation or other chemical attack.

## Easy reading pressure gauge

Double scale bar/psi gauge.

## Semi-automatic draining systems

No manual draining.

## Regulation handle

Oversized. Easy manipulations, even with gloves.

## Policarbonate vessel

High-resistant and high transparency. Does not yellow over time.

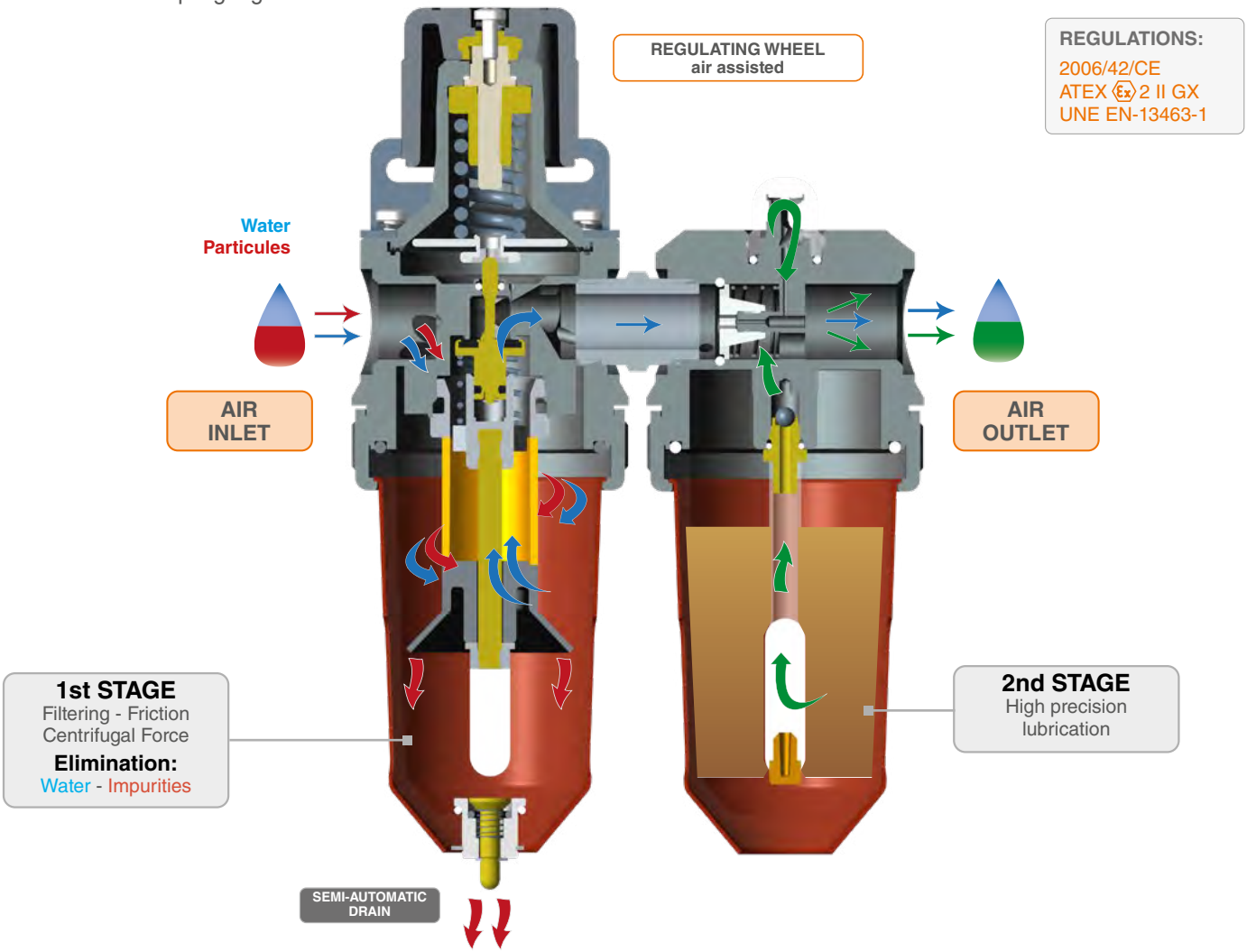


The Plus filter range lubrication system offers maximum smoothness of operation, maximum precision. Easy release, automatic pressure drop.

Air assisted regulator and continuous air supply.

Aluminium body. CNC mechanized. Sturdy build. Liquid and impurities holding.

# Plus range filters

## 479 Plus Filter

The most compact solution for the small workshops, industry or priming and preparation areas.

Large air flow, maximum reliability regulating system, high quality pressure gauge, the best materials. Don't undervalue your small painting works or reduce the life of your pneumatic tools by using poor quality regulators and no filtration capacity.

Adaptable to any size of hose. It comes with reducers. Produced from a solid aluminium block, great filtrating capacity with check window for waste particle and semi-automatic drain system, it has everything in a minimum space.

## 970 Plus Filter

The virtues of the regulator-filter 479+ is now linked to a lubricating element, setting itself apart as specific workshop equipment. It supplies clean, lubricated air to all your pneumatic tools.

Accurate control of the oil content by means of a "drop-by-drop" hand regulator, zero pressure loss thanks to the in-line design, maximum reliability and productivity in the most compact package.

Assure the supply of clean air and properly lubricated to tools and pneumatic engines.

| TECHNICAL DATA | 479 PLUS | | 970 PLUS | |
|---|---|---|---|---|
| Weight | 0.72 Kg. | 1.58 lbs | 1.24 Kg. | 2.72 lbs |
| Dimensions | 22.5 x 6.5 x 8.5 cm | 8.86 x 2.56 x 3.35" | 22.5 x 14 x 8.5 cm | 8.86 x 5.5 x 3.35" |
| Air flow at 2 bar (29 psi) | 1,700 L/min. | 60 cfm | 1,920 L/min. | 68 cfm |
| Connections | 1/2", 3/8", 1/4" | | 1/2", 3/8", 1/4" | |
| Filtering type | **1st** 40 µ bronze filter | | **1st** 40 µ bronze filter | |
| Maximun working pressure | 10 bar | 145 psi | 10 bar | 145 psi |
| Maximum working temperature | 90°C | 194°F | 90°C | 194°F |
| Drain system | Automatic drain | | Semi-automatic drain | |

## VERSIONS

| Description | Code |
|---|---|
| 479 Plus air regulator filter with 1/2" connection | **10730401** |
| 479 Plus air regulator filter with 3/8" connection | **10730402** |
| 479 Plus air regulator filter with 1/4" connection | **10730403** |
| 970 Plus air lubricator regulator filter with 1/2" connection | **10750301** |
| 970 Plus air lubricator regulator filter with 3/8" connection | **10750302** |
| 970 Plus air lubricator regulator filter with 1/4" connection | **10750303** |

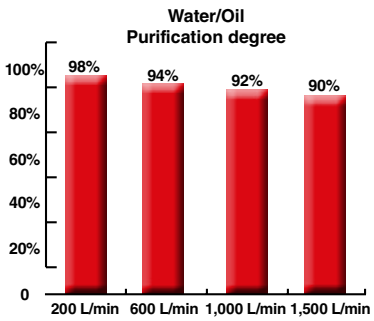

# Plus range filters

## 430 Plus regulator

Mini air regulator. Small, robust, reliable and long lasting. Mechanized from a solid aluminium block.

Diaphragm regulator from 0 to 10 bar. High pressure regulator. Quality pressure gauge up to 10 bar. Double scale bar/psi.

Stand included for assembly on the wall. Standard adaptors and fittings included. Quick release and short shift wheel.

## 439 Plus Filter

High flow filter for insertion in air lines. Suitable for all type of installations, accessories included. Made of aluminium. High-durability.

Check window for waste liquids. Semi-automatic drain system. Minimum pressure loss.

Minimum maintenance.

## 437 Plus Lubricator

Ideal for the proper lubrication of pneumatic tools. Multiple inlet and outlet dimensions (1/2", 3/8" and 1/4"). Oil level check window.

Manual oil regulator by level check window, "drop by drop" system. CNC mechanized from a solid aluminium block. Made of aluminium, as the whole Plus range.

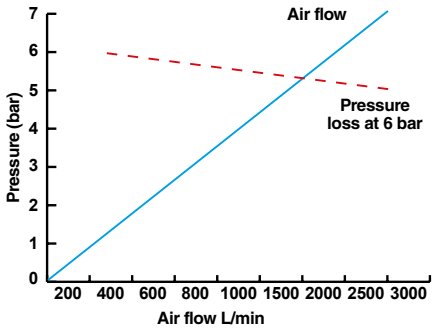


| TECHNICAL DATA | 430 PLUS | | 439 PLUS | | 437 PLUS | |
|---|---|---|---|---|---|---|
| Weight | 0.54 Kg. | 1.19 lbs | 0.55 Kg. | 1.21 lbs | 0.48 Kg. | 1.06 lbs |
| Dimensions | 10.7 x 6.5 x 11.5 cm<br>4.21 x 2.56 x 4.53" | | 15.8 x 7.3 x 7.3 cm<br>6.22 x 2.87 x 2.87" | | 16.5 x 7.3 x 7.3 cm<br>6.50 x 2.87 x 2.87" | |
| Air flow at 2 bar (29 psi) | 1,200 - 1,700 L/min. | 42 - 60 cfm | 1,280 L/min. | 45 cfm | 1,920 L/min. | 68 cfm |
| Connections | 1/2", 3/8", 1/4" | | 1/2", 3/8", 1/4" | | 1/2", 3/8", 1/4" | |
| Filtering type | - | | **1st** 40 µ bronze filter | | - | |
| Maximun working pressure | 10 bar | 145 psi | 10 bar | 145 psi | 10 bar | 145 psi |
| Maximum working temperature | 90°C | 194°F | 90°C | 194°F | 90°C | 194°F |
| Drain system | - | | Semi-automatic drain | | Semi-automatic drain | |

### VERSIONS

| Description | Code |
|---|---|
| 430 Plus micro air regulator with 1/2" connection | **10740501** |
| 430 Plus micro air regulator with 3/8" connection | **10740502** |
| 430 Plus micro air regulator with 1/4" connection | **10740503** |
| 439 Plus air filter with 1/2" connection | **10720401** |
| 439 Plus air filter with 3/8" connection | **10720402** |
| 439 Plus air filter with 1/4" connection | **10720403** |

### VERSIONS

| Description | Code |
|---|---|
| 437 Plus Lubricator with 1/2" connection | **10710301** |
| 437 Plus Lubricator with 3/8" connection | **10710302** |
| 437 Plus Lubricator with 1/4" connection | **10710303** |

# Plus range filters

## Sagola 430 Plus regulator and 439 Plus filter Spare parts

The Sagola 430 Plus regulator and 439 Plus filter is covered by a **3-year** manufacturers warranty from SAGOLA. Please follow the recommended housekeeping and maintenance procedure as prescribed in the operation manuals.

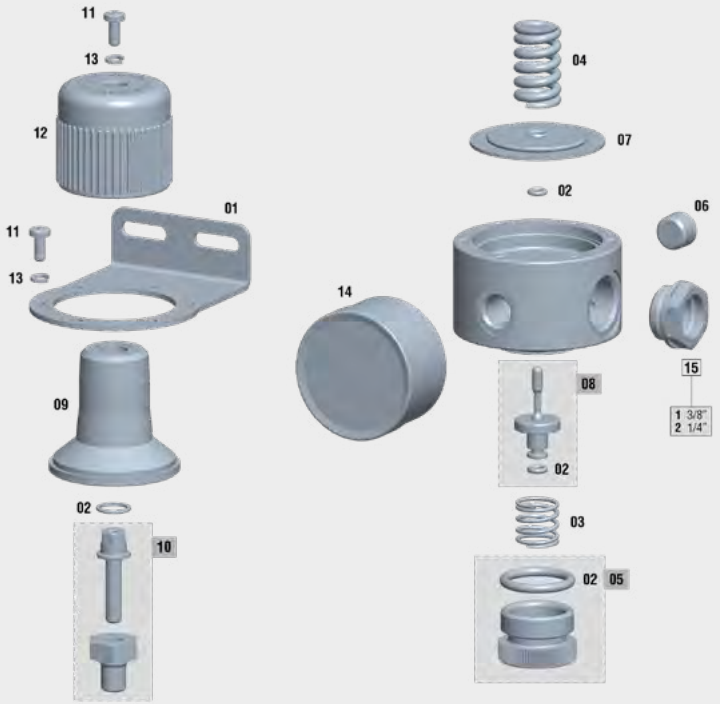


*Last updated version of the exploded view*

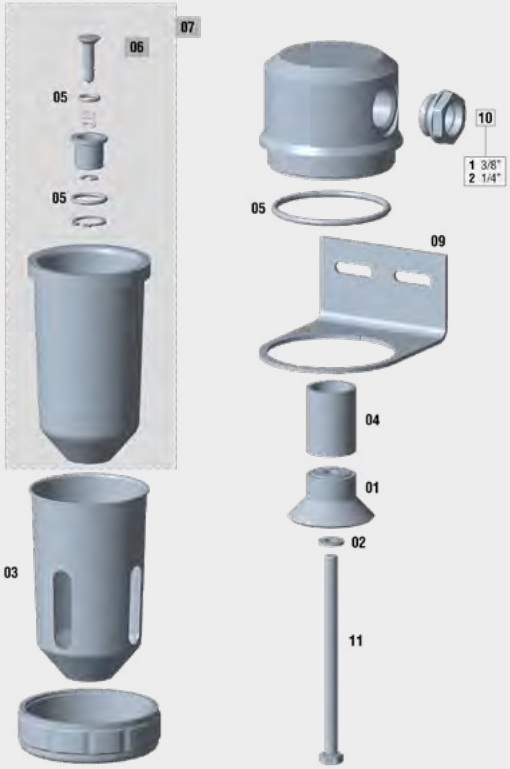


*Last updated version of the exploded view*

### SPARE PARTS 430 PLUS

| No. | Code | Description |
|---|---|---|
| 01 | 53310211 | Bracket |
| 02 | 56418523 | Gasket Kit |
| 03 | 54710283 | Spring 12 x 22 x 1.9 |
| 04 | 54710281 | Spring 18 x 31 x 3.5 |
| 05 | 56414920 | Top coupling + Pressure regulator gasket |
| 06 | 55752117 | Top coupling 1/4” M DIN 906 A2 S. Steel |
| 07 | 56414305 | Membrane |
| 08 | 56417416 | Air valve |
| 09 | 57110205 | Regulator bell lid |
| 10 | 56410084 | Regulation Screw + Nut Kit |
| 11 | 57251305 | Screw DIN 7985 M4x10 |
| 12 | 57810339 | Pressure regulator wheel |
| 13 | 80860703 | Washer DIN 7980 blued |
| 14 | 54550016 | Gauge 12 1/4” |
| 15/1 | 11000112 | Connection 1/2" M - 3/8" F (2 units) |
| 15/2 | 11000113 | Connection 1/2" M - 1/4" F (2 units) |

### SPARE PARTS 439 PLUS

| No. | Code | Description |
|---|---|---|
| 01 | 50810028 | Air deflector washer |
| 02 | 50850408 | Washer DIN 125 6.4 S. Steel |
| 03 | 52710313 | Protective casing |
| 04 | 53610204 | Porous bronze filter 40 µ |
| 05 | 56418529 | O-ring kit |
| 06 | 56418530 | Complete semi-automatic drain Kit |
| 07 | 56417708 | Vessel + semi-automatic drain |
| 08 | 57410109 | Vessel fastening nut |
| 09 | 53310201 | Bracket |
| 10/1 | 11000112 | Connection 1/2” M - 3/8” F (2 units) |
| 10/2 | 11000113 | Connection 1/2” M - 1/4” F (2 units) |
| 11 | 57251025 | Screw DIN 933 M6 x 100 S. Steel |

*This exploded view is not the material list of the filter*

# Plus range filters

## Sagola 437 Plus lubricator and 970 Plus filter Spare parts

The Sagola 437 Plus lubricator and 970 Plus filter is covered by a **3-year** manufacturers warranty from SAGOLA. Please follow the recommended housekeeping and maintenance procedure as prescribed in the operation manuals.

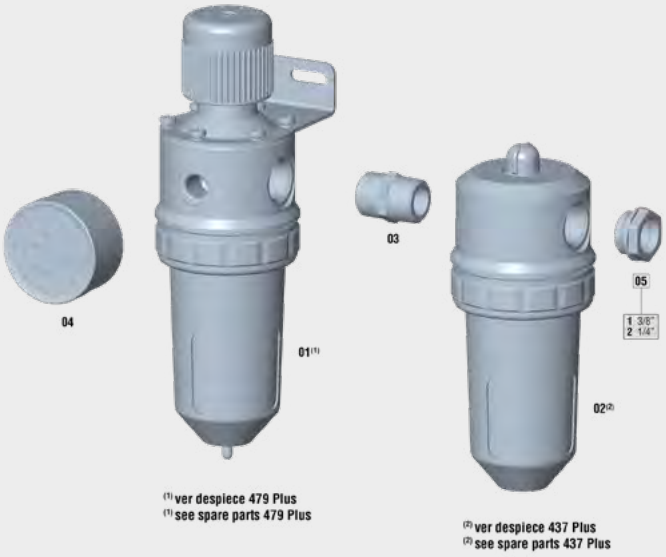


*Last updated version of the exploded view*

*Last updated version of the exploded view*

### SPARE PARTS — 437 PLUS

| No. | Code | Description |
|---|---|---|
| 01 | 56418528 | Choke Kit |
| 02 | 56418527 | O-ring Kit |
| 03 | 52710313 | Protective casing |
| 04 | 52840503 | Vessel deposit |
| 05 | 53310201 | Bracket |
| 06/1 | 11000112 | Connection 1/2" M - 3/8" F (2 units) |
| 06/2 | 11000113 | Connection 1/2" M - 1/4" F (2 units) |
| 07 | 57410109 | Vessel fastening nut |
| 08 | 56410083 | Visor Kit |
| 09 | 51250114 | Steel ball DIN 5401 5 mm. |
| 10 | 56417134 | Absorption tube Kit |
| 11 | 56417417 | Air valve |

### SPARE PARTS — 970 PLUS

| No. | Code | Description |
|---|---|---|
| 01 | 10730401 | 479 PLUS Purifier-regulator |
| 02 | 10710301 | 437 PLUS Lubrificator |
| 03 | 11000102 | Connection 1/2" M-M (2 units) |
| 04 | 54550016 | Gauge 12 1/4” |
| 05/1 | 11000112 | Connection 1/2" M - 3/8" F (2 units) |
| 05/2 | 11000113 | Connection 1/2" M - 1/4" F (2 units) |

*This exploded view is not the material list of the filter*

# Plus range filters

## Sagola 479 Plus filter Spare parts

The Sagola 479 Plus filter is covered by a **3-year** manufacturers warranty from SAGOLA.
Please follow the recommended housekeeping and maintenance procedure as prescribed in the operation manuals.

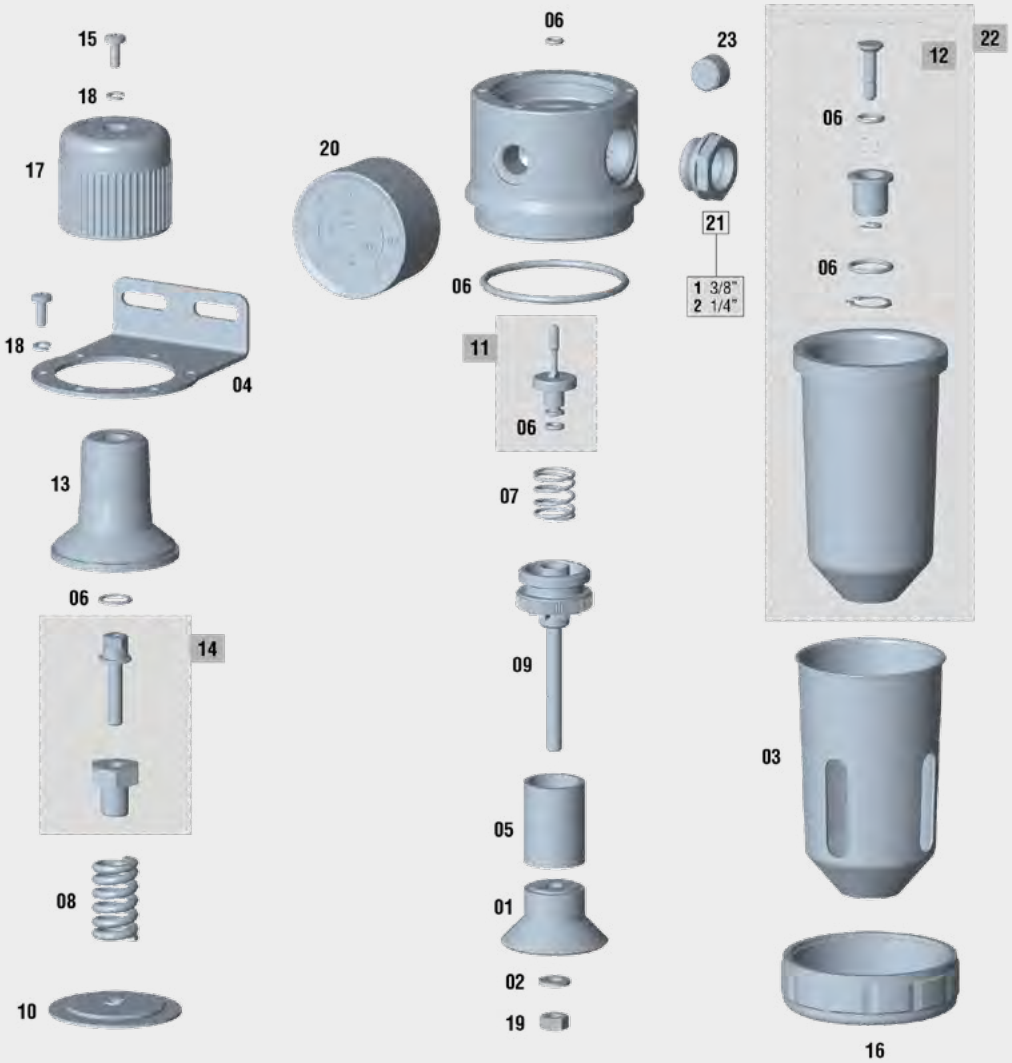


*Last updated version of the exploded view*

### SPARE PARTS — 479 PLUS

| No. | Code | Description |
|---|---|---|
| 01 | 50810028 | Air deflector washer |
| 02 | 50850409 | Washer DIN 125 S. Steel |
| 03 | 52710313 | Protective casing |
| 04 | 53310211 | Bracket |
| 05 | 53610204 | Porous bronze filter 40 µ |
| 06 | 56418531 | Gasket Kit |
| 07 | 54710283 | Spring 12 x 22 x 1.9 |
| 08 | 54710281 | Spring 18 x 31 x 3.5 |
| 09 | 56310604 | Air filter support |
| 10 | 56414305 | Membrane |
| 11 | 56417416 | Air valve |
| 12 | 56418530 | Complete semi-automatic drain Kit |
| 13 | 57110205 | Regulator bell lid |

### SPARE PARTS — 479 PLUS

| No. | Code | Description |
|---|---|---|
| 14 | 56410084 | Regulation Screw + Nut Kit |
| 15 | 57251305 | Screw DIN 7985 M4x10 |
| 16 | 57410109 | Vessel fastening nut |
| 17 | 57810339 | Pressure regulator wheel |
| 18 | 80860703 | Washer DIN 7980 blued |
| 19 | 57450905 | Nut DIN 934 M6x100 S. Steel |
| 20 | 54550016 | Gauge 12 1/4” |
| 21/1 | 11000112 | Connection 1/2" M - 3/8" F (2 units) |
| 21/2 | 11000113 | Connection 1/2" M - 1/4" F (2 units) |
| 22 | 56417708 | Vessel + semi-automatic drain |
| 23 | 55752117 | Top coupling 1/4” M DIN 906 A2 S. Steel |

# 6

# Compressed air complements

***Anti-static hoses, connectors, quick couplings, couplings and seals are elements which complement a good tool with safe, quality work for the painter and panel beater.***

***The weakest link breaks the chain, we are aware of that here in SAGOLA, and no concessions are made in our accessories range. A safe bet for your professional needs.***

# Air hoses

## Anti-static air hose

Anti-static compressed air hose ideal for painting in the booth. Light, flexible and manageable. Twist free.

EPDM rubber hose with exterior textile reinforcement

High security crimped ends able to bear the high temperatures of the booth. No need to use flanges, avoiding that they release or cause leaks due to dilation.

8 mm. inner diameter. Valid to work with high flow HVLP sprayguns.

1/4" F couplings with conical closure and flare fitting for easy assembly of the push connector.

**REGULATIONS:**
97/23/CE
UNE EN-559

### TECHNICAL DATA — ANTI-STATIC AIR HOSE

| | | | |
|---|---|---|---|
| Temperature range | -40°C to 120°C | -40°F to 248°F | |
| Maximun working pressure | 20 bar | 290 psi | |
| Breakage pressure | 80 bar | 1.160 psi | |
| Material (inside) | EPDM (Ethylene Propylene Diene type M ASTM) | | |
| Material (outside) | Textile reinforcement | Colour | Blue |
| Connections | BSP 1/4" F couplings with conical closure and flare fitting | | |
| Conducting pipe | < 1 M Ω | | |

### VERSIONS

| Description | Code | US-Mil Code | Euro-Profile Code |
|---|---|---|---|
| 2.5 m. Anti-static air hose Ø 6 x 12 mm. | **56414014** | - | - |
| 6 m. Anti-static air hose Ø 8 x 15 mm. | **56414024** | - | - |
| 11 m. Anti-static air hose Ø 8 x 15 mm. | **56414025** | **56414047** | **56414049** |
| 16 m. Anti-static air hose Ø 8 x 15 mm. | **56414027** | **56414048** | **56414050** |
| 26 m. Anti-static air hose Ø 8 x 15 mm. | **56414026** | - | - |

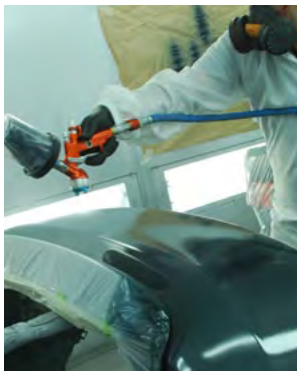

## Air hose

Multi-use hose. Compact with excellent performance and oil resistance. 8 x 15 mm. hose in different lengths and in rolls of 100 meters. Made of Thermorubber with external Polyester reinforcement. 8 mm. inner diameter. Valid to work with high flow HVLP sprayguns.

**REGULATIONS:**
97/23/CE

Working pressure: 20 bar (60 bar of breakage pressure).

Temperature range: de -15°C to 60°C

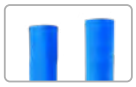

### VERSIONS

| Description | Code | US-Mil Code | Euro-Profile Code |
|---|---|---|---|
| 100 m. Air hose roll Ø 8 x 15 mm. | **52450008** | - | - |
| 11 m. Air hose Ø 8 x 15 mm. | - | **56414051** | **56414053** |
| 16 m. Air hose Ø 8 x 15 mm. | - | **56414052** | **56414054** |

*Air hose with connections available in 11 and 16 m.*

# Air and product hoses

## Air and product hose set

Hose set for low pressure pneumatic pumps.

6 x 8 mm. Nylon product hose with quick connect terminals. Adapter 3/8 ” female for pressure sprayguns.

EPDM rubber anti-static air hose 8 x 15 mm. with high security crimped ends 1/4 ” F.

Nylon protective cover of high resistance to friction and abrasion.

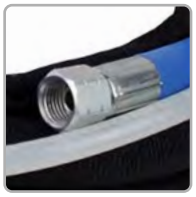

**REGULATIONS:**
97/23/CE
UNE EN-559

**REGULATIONS:**
Air hose: 97/23/CE, UNE EN-559
Product hose: DIN 73378
Cover: RoHS, ISO 6945, MSHA

### TECHNICAL DATA

**AIR AND PRODUCT HOSE SET**

| | | |
|---|---|---|
| Temperature range (hoses) | -20°C to 60°C | -4°F to 140°F |
| Temperature range (cover) | -60°C to 125°C | -76°F to 257°F |

| | Product hose | Air hose | Cover |
|---|---|---|---|
| Maximun working pressure | 18 bar (261 psi) | 20 bar (290 psi) | - |
| Breakage pressure | - | 60 bar (870 bar) | - |
| Material (inside) | Polyamide PA12 | EPDM | Polyester |
| Material (outside) | Polyamide PA12 | Textile reinforcement | Polyester |
| Colour | White | Blue | Black |
| Anti-static | - | OK | - |
| Connections | 3/8” coupling | 1/4” coupling | - |

### VERSIONS

| Description | Code |
|---|---|
| 5 m. Hose set. Ø 8 x 15 mm. air hose and Ø 6 x 8 mm. product hose + protective cover | 56414039 |
| 7.5 m. Hose set. Ø 8 x 15 mm. air hose and Ø 6 x 8 mm. product hose + protective cover | 56414044 |
| 10 m. Hose set. Ø 8 x 15 mm. air hose and Ø 6 x 8 mm. product hose + protective cover | 56414040 |
| 15 m. Hose set. Ø 8 x 15 mm. air hose and Ø 6 x 8 mm. product hose + protective cover | 56414041 |
| 20 m. Hose set. Ø 8 x 15 mm. air hose and Ø 6 x 8 mm. product hose + protective cover | 56414042 |

# Quick couplings

## Couplings and Connectors

The new range of plugs SAGOLA presents cutting-edge design. SAGOLA offers a wide range that gives cover 100% of market requirements. Is incorporated security versions. All steel and aluminum plugs are BSP; Males (BSPT) and females (BSPP).

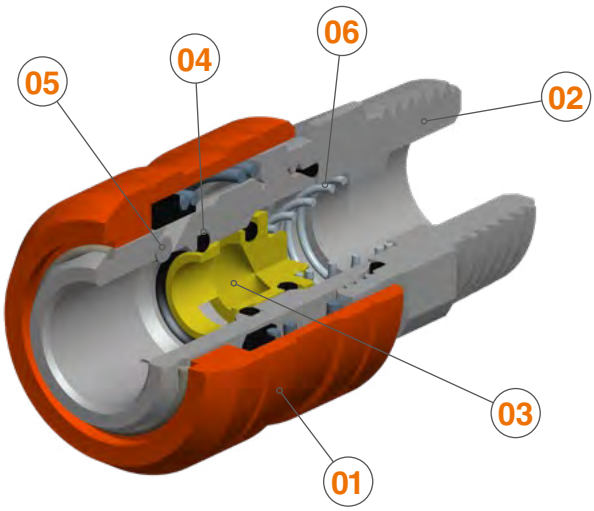


Plug body made of treated steel and valve made of brass. So a guaranteed life of more than 1,500,000 uses. The new range of plugs SAGOLA incorporates a handle made of composite, which gives a high resistance to both attrition and drag. Attrition resistance tested in more than 48,000 impacts and the equivalent to a crawl 12 km.

1. **SHOOTER** made of composite with a weight reduction and extraordinary durability against impact.
2. **BODY PLUG** made of steel with anticorrosive treatment.
3. **VALVES** Brass valve manufactured, specific to work at high temperatures.
4. **JOINTS** Nitrile Butadiene. Operating temperature range: -20°C +100°C.
5. **PINS** made of tempered high strength steel that guarantees the absence of attrition.
6. **SPRING** made of stainless steel.

### US-Mil range — ULTRA LIGHT (45 grams)

**Quick coupling**
**US-Mil** RANGE
Flow: 68 m³/h. - 1,133 L/min.
Body and shooter made of high strength **aluminum**. Valve made of brass. Pins made of high strength steel.
Air coupling: 1/4”

| Code | Version |
|---|---|
| 11010531 | BSPT 1/4” |

| Code | Version |
|---|---|
| 11010431 | BSPP 1/4” |

| Code | Version |
|---|---|
| 11010629 | Barb. 8 mm. |

### US-Mil range — STANDARD

**Quick coupling**
**US-Mil** RANGE
Flow: 68 m³/h. - 1,133 L/min.
Simple shutter plug, made of hardened **steel** with gasket made of Nitrile Butadiene. Its excellent sealing prevent dirt penetrates inside. High strength sleeve.

| Code | Version |
|---|---|
| 11010524 | BSPT 1/4” |
| 11010525 | BSPT 3/8” |
| 11010526 | BSPT 1/2” |

| Code | Version |
|---|---|
| 11010424 | BSPP 1/4” |
| 11010425 | BSPP 3/8” |
| 11010426 | BSPP 1/2” |

| Code | Version |
|---|---|
| 11010624 | Barb. 8 mm. |
| 11010625 | Barb. 10 mm. |

| 25 UNITS | | | | | |
|---|---|---|---|---|---|
| | 11010527 | BSPT 1/4” | 11010427 | BSPP 1/4” | 11010626 | Barb. 8 mm. |

### US-Mil range — SAFETY

**Quick coupling**
**US-Mil** RANGE
Flow: 68 m³/h. - 1,133 L/min.
Plug made of hardened **steel** with gasket made of Nitrile Butadiene and double effect opening. Anti-whiplash safety plug according to ISO-4414.
Two movements “push-pull” to disconnect.
High strength sleeve.

| Code | Version |
|---|---|
| 11010528 | BSPT 1/4” |
| 11010529 | BSPT 3/8” |
| 11010530 | BSPT 1/2” |

| Code | Version |
|---|---|
| 11010428 | BSPP 1/4” |
| 11010429 | BSPP 3/8” |
| 11010430 | BSPP 1/2” |

| Code | Version |
|---|---|
| 11010627 | Barb. 8 mm. |
| 11010628 | Barb. 10 mm. |

# Quick couplings

## Euro-Profile range

STANDARD

**Quick coupling**
**Euro Profile** RANGE
Flow: 85 m³/h. - 2,000 L/min.
Simple shutter plug, made of hardened **steel** with gasket made of Nitrile Butadiene. Its excellent sealing prevent dirt penetrates inside. High strength sleeve.
Air coupling: 7.6 mm.

| Code | Version |
|---|---|
| 11010823 | BSPT 1/4” |
| 11010824 | BSPT 3/8” |
| 11010825 | BSPT 1/2” |

| Code | Version |
|---|---|
| 11010723 | BSPP 1/4” |
| 11010724 | BSPP 3/8” |
| 11010725 | BSPP 1/2” |

| Code | Version |
|---|---|
| 11010924 | Barb. 8 mm. |
| 11010923 | Barb. 10 mm. |

## Euro-Profile range

SAFETY

**Quick coupling**
**Euro Profile** RANGE
Flow: 85 m³/h. - 2,000 L/min.
Plug made of hardened **steel** with gasket made of Nitrile Butadiene and double effect opening. Anti-whiplash safety plug according to ISO-4414.
Two movements “push-pull” to disconnect.
High strength sleeve.
Air coupling: 7.6 mm.

| Code | Version |
|---|---|
| 11011323 | BSPT 1/4” |
| 11011324 | BSPT 3/8” |
| 11011325 | BSPT 1/2” |

| Code | Version |
|---|---|
| 11011423 | BSPP 1/4” |
| 11011424 | BSPP 3/8” |
| 11011425 | BSPP 1/2” |

| Code | Version |
|---|---|
| 11011523 | Barb. 8 mm. |
| 11011524 | Barb. 10 mm. |

## Multi-Profile range

3x1 system. Compatibility: US-MIL/EUROPROFILE/ITALIAN PROFILE STANDARD

**Quick coupling**
**Multi Profile** RANGE
FLow: 85 m³/h. - 2,000 L/min.
Simple shutter plug, made of **steel** with gasket made of Nitrile Butadiene. Its excellent sealing prevent dirt penetrates inside.
Air coupling: 8 mm.

| Code | Version |
|---|---|
| 11010826 | BSPT 1/4” |
| 11010827 | BSPT 3/8” |

| Code | Version |
|---|---|
| 11010726 | BSPP 1/4” |
| 11010727 | BSPP 3/8” |

| Code | Version |
|---|---|
| 11010925 | Barb. 8 mm. |
| 11010926 | Barb. 10 mm. |

## Nitto range

ASIA-PACIFIC market exclusive profile STANDARD

**Quick coupling**
**Nitto** RANGE
FLow: 85 m³/h. - 2,000 L/min.
Simple shutter plug, made of **steel** with gasket made of Nitrile Butadiene. Its excellent sealing prevent dirt penetrates inside.
Air coupling: 8 mm.

| Code | Version |
|---|---|
| 11011701 | BSPT 1/4” |
| 11011702 | BSPT 3/8” |

| Code | Version |
|---|---|
| 11011801 | BSPP 1/4” |
| 11011802 | BSPP 3/8” |

| Code | Version |
|---|---|
| 11011901 | Barb. 8 mm. |
| 11011902 | Barb. 10 mm. |

## US-Mil range

Brass plug STANDARD

**Quick coupling**
**US-Mil** RANGE
Spec C-4109
Flow: 600 L/min.
Versatile. Simple blocking plug made of **brass** with Buna N gasket. Its excellent sealing avoids the penetration of impurities to the inside. Fully compatible with earlier lines of SAGOLA plugs.

| Code | Version |
|---|---|
| 11010520 | BSPT 1/4” |
| 11010521 | BSPT 3/8” |
| 11010522 | BSPT 1/2” |

| Code | Version |
|---|---|
| 11010420 | BSPP 1/4” |
| 11010421 | BSPP 3/8” |
| 11010422 | BSPP 1/2” |

| Code | Version |
|---|---|
| 11010621 | Barb. 8 mm. |
| 11010622 | Barb. 10 mm. |

| 25 UNITS | | | | | | |
|---|---|---|---|---|---|---|
| | 11010523 | BSPT 1/4” | 11010423 | BSPP 1/4” | 11010623 | Barb. 8 mm. |

# Quick connectors

The size 2 plug is the most commonly used push plug in paint and body shops, and also in industry for the connection of all kinds of pneumatic tools. Silicone free. All springs, valves and pins made of stainless steel. All SAGOLA connectors are manufactured in high carbon steel making them extremely strong and stress resistant.

## US-Mil range

Connector without blocker. Made of steel.

**Quick connector**
**US-Mil** RANGE
Spec C-4109 (2 units)
Air coupling: 5,5 mm.
Fully compatible with earlier lines of SAGOLA plugs. Made of high-carbon **steel**. Anti-corrosive nickel etched finish. Connector without blocker.

| Code | Version |
|---|---|
| 11020420 | BSPT 1/4” |
| 11020421 | BSPT 3/8” |
| 11020422 | BSPT 1/2” |

| Code | Version |
|---|---|
| 11020520 | BSPP 1/4” |
| 11020521 | BSPP 3/8” |
| 11020522 | BSPP 1/2” |

| Code | Version |
|---|---|
| 11020621 | Barb. 8 mm. |
| 11020622 | Barb. 10 mm. |

| 50 UNITS | | | | | |
|---|---|---|---|---|---|
| | 11020423 | BSPT 1/4” | 11020524 | BSPP 1/4” | 11020623 | Barb. 8 mm. |

## US-Mil range

Orientable connector.

**Orientable Quick connector**
**US-Mil** RANGE (2 units)
Air coupling: 5,5 mm.
Exclusive rotating dial system, for greater freedom of movement. Made of high-carbon **steel**. Anti-corrosive nickel etched finish. Connector without blocker.

| Code | Version |
|---|---|
| 11020523 | BSPP 1/4” |

| Code |
|---|
| 70000011 |

## Plugs display box

Sagola plugs and connectors range sampler.

## Euro-Profile range

Maximum performance and durability in high production workshops

**Quick connector**
**Euro-Perofile** RANGE (2 units)
High flow. Air coupling: 7-8 mm.
Made of high-carbon **steel**.
Anti-corrosion blue galvanized finish. Connector without blocker.

| Code | Version |
|---|---|
| 11020710 | BSPT 1/4” |
| 11020721 | BSPT 3/8” |
| 11020722 | BSPT 1/2” |

| Code | Version |
|---|---|
| 11020810 | BSPP 1/4” |
| 11020821 | BSPP 3/8” |
| 11020822 | BSPP 1/2” |

| Code | Version |
|---|---|
| 11020921 | Barb. 8 mm. |
| 11020922 | Barb. 10 mm. |

## Nitto range

ASIA-PACIFIC market exclusive profile

**Quick connector**
**Nitto** RANGE (2 units)
High flow. Air coupling: 7-8 mm.
Made of high-carbon **steel**.
Anti-corrosion treatment.
Connector without blocker.

| Code | Version |
|---|---|
| 11021001 | BSPT 1/4” |
| 11021002 | BSPT 3/8” |

| Code | Version |
|---|---|
| 11021101 | BSPP 1/4” |
| 11021102 | BSPP 3/8” |

| Code | Version |
|---|---|
| 11021201 | Barb. 8 mm. |
| 11021202 | Barb. 10 mm. |

# Threaded couplings

## Connection coupling

High flow. Made of brass with anti-corrosive treatment. (2 units)

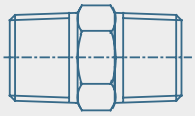

| Code | Version |
|---|---|
| 11000101 | BSPT 1/4” M-M |
| 11000102 | BSPT 1/2” M-M |
| 11000103 | BSPT 3/8” M-M |

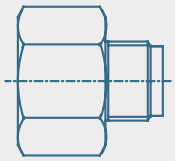

| Code | Version |
|---|---|
| 11000104 | BSPT 1/2” M - 3/8” M |
| 11000105 | BSPT 3/8” M - 1/4” M |
| 11000112 | BSPT 1/2” M - 3/8” F |
| 11000113 | BSPT 1/2” M - 1/4” F |

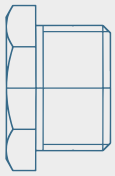

| Code | Version |
|---|---|
| 11000106 | BSPP 1/2” H - 3/8” M |
| 11000107 | BSPP 3/8” H - 1/4” M |
| 11000108 | BSPP 3/8” M - 1/4” F |

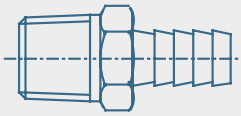

| Code | Version |
|---|---|
| 11000109 | BSPT 1/2” M - Barb. 8 mm. |
| 11000110 | BSPT 3/8” M - Barb. 8 mm. |
| 1100011 | BSPT 1/4” M - Barb. 8 mm. |

## How to connect and disconnect the plug?

### Standard plug connect and disconnect

1. Press until coupled

2. Pull the body as the arrow indicates

3. Disconnect the plug

### Safety plug connect and disconnect

1. Move plug and tool as indicated by arrows

2. Push the plug

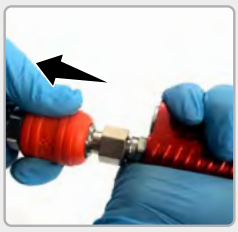

3. Pull the plug

4. Disconnect the plug

# 7

# General application spray guns

***Pneumatic tool of essential use in the body shop. Complete and high-quality service.***

***In this section we offer cord sealant guns, anti-gravel guns for underbody, blow guns and pressure check gun.***

# 3900 Plus sealant guns

## 3900 Plus sealant guns

The SAGOLA 3900 Plus pneumatic sealers are a compact, efficient and light solution for everyday needs in any workshop. These pneumatic guns are very useful when it comes to structure assembling, repairs and windshield set-ups, amongst others.

There are two versions: the 3900 Plus for sealants in cartridges and the 3900 Plus M4/6 for sealants in sausages. Both versions include a trigger with discharge valve, which guarantees a great precision and control.

The metallic internal parts assure a long working life. Besides, those parts do not require any manipulation neither any maintenance.

Its body is made of high resistance aluminum. The front part on the 3900 Plus is made of non-deformable plastic.

Very strong product capable to work for long working hours.

### TECHNICAL DATA

**3900 PLUS**

| | 3900 Plus | | 3900 Plus M4 | | 3900 Plus M6 | |
|---|---|---|---|---|---|---|
| Length | 250 mm. | 9.84” | 250 mm. | 9.84” | 320 mm. | 12.60” |
| Weight | 650 g. | 1.43 lbs | 780 g. | 1.72 lbs | 965 g. | 2.13 lbs |
| Air inlet connection | BSP 1/4” M | | BSP 1/4” M | | BSP 1/4” M | |
| Standard supply type | Cartridge | | Sausages | | Sausages | |
| Capacity | 300 ml. | 10.14 oz fl | 300/400 ml. | 10.1/13.5 oz fl | 300/400/600 ml. | 10.1/13.5/ 20.29 oz fl |
| Working pressure | 4 - 6 bar | 58 - 87 psi | 4 - 6 bar | 58 - 87 psi | 4 - 6 bar | 58 - 87 psi |
| Maximum air inlet pressure | 10 bar | 145 psi | 10 bar | 145 psi | 10 bar | 145 psi |
| Material on the front | Plastic | | Anodized aluminum | | Anodized aluminum | |
| Discharge valve | OK | | OK | | OK | |

# 3900 Plus sealant guns

## Sealant Gun main parts

**01** AIR VALVE

**02** AIR INLET

**03** TRIGGER

**04** ALUMINIUM BODY

**05** ALUMINUM FRONT

**06** PLASTIC FRONT

**07** PISTON

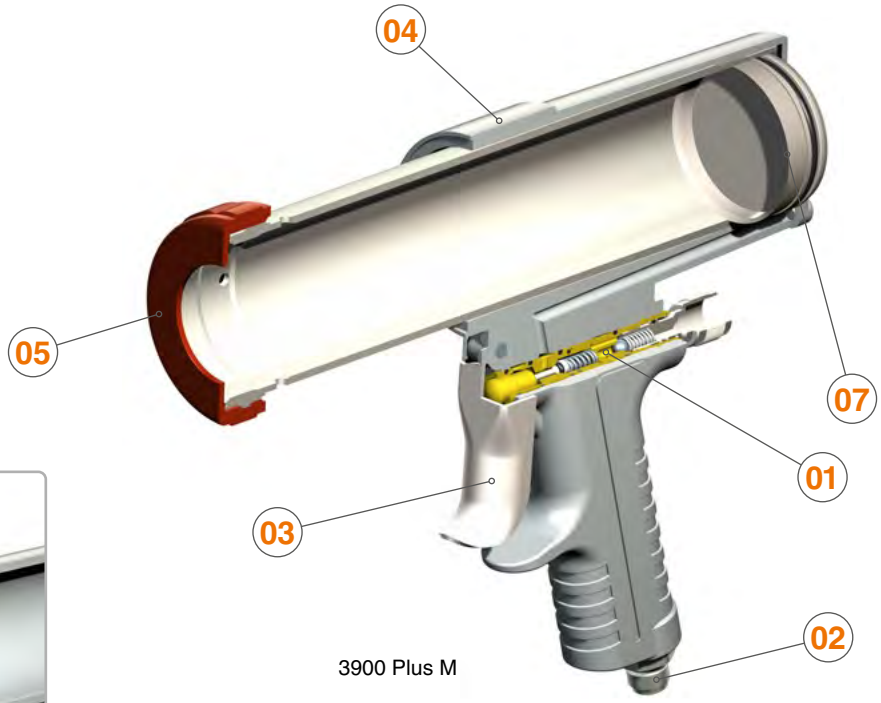


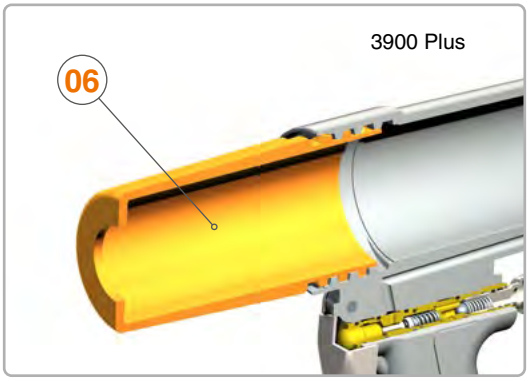

### VERSIONS

| Description | Code |
|---|---|
| 3900 Plus sealant gun | 10330201 |
| 3900 Plus M4 sealant gun | 10330401 |
| 3900 Plus M6 sealant gun | 10330402 |

## Preparation of the cartridge or sausage

**Cartridge preparation 3900 Plus**

1. Cut the end of the cartridge and cap

2. Attach the cap to the cartridge

3. Remove the front cover and insert the cartridge

4. Close the deposit with the front cover

**Sausage preparation 3900 Plus M**

1. Cut off the end of the sausage

2. Remove the front cover of the deposit

3. Insert the cap

4. Place the sausage inside the deposit

5. Close the deposit with the front cover

# 3900 Plus sealant guns

## Sagola 3900 Plus Spare parts

The Sagola 3900 Plus sealant guns is covered by a **3-year** manufacturers warranty from SAGOLA.
Please follow the recommended housekeeping and maintenance procedure as prescribed in the operation manuals.

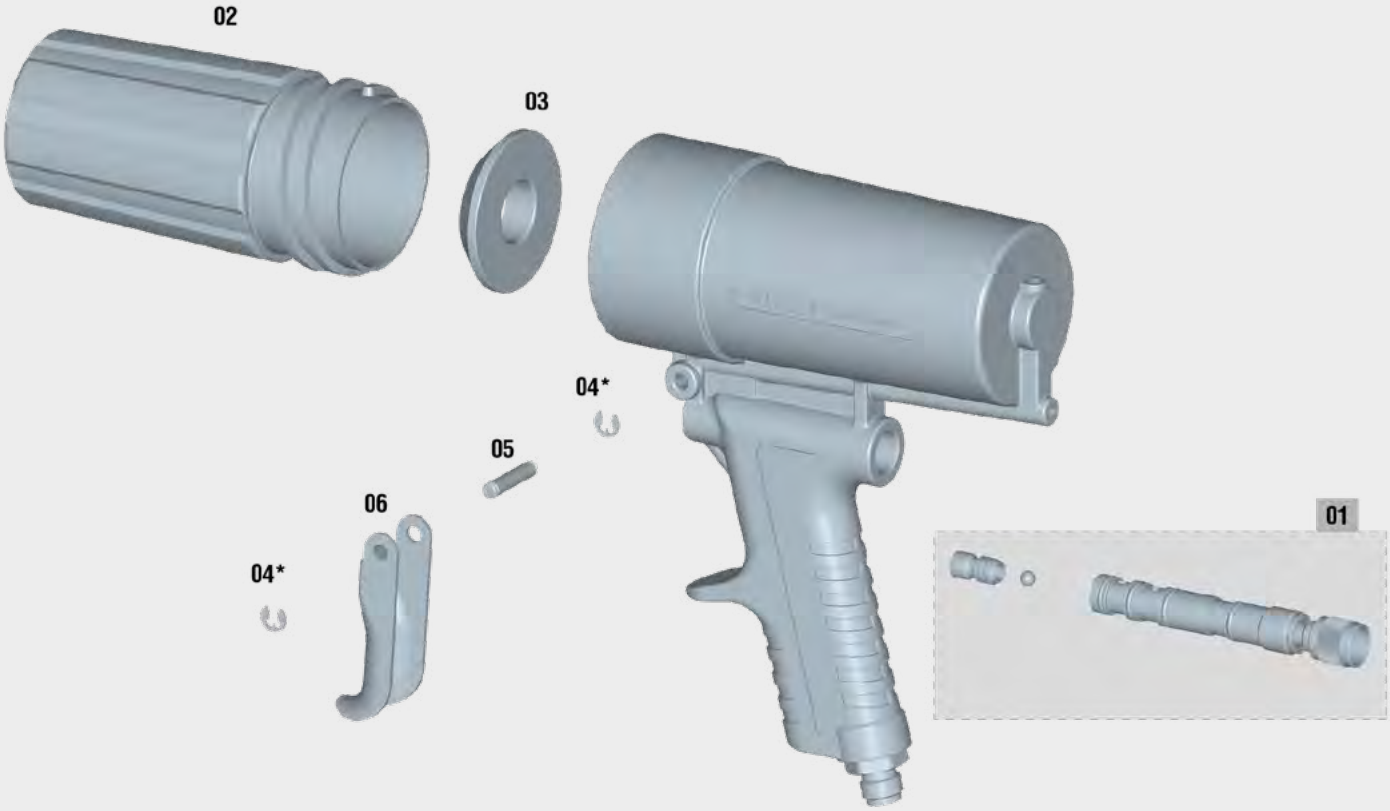


**SPARE PARTS** **3900 PLUS**

| No. | Code | Description |
|---|---|---|
| 01 | 56417206 | Air valve Kit |
| 02 | 57110704 | Gun front cover (plastic) |
| 03 | 50811110 | End washer |
| 04 | 50850604 | Washer DIN 6799 RS 4 S. Steel |
| 05 | 53110905 | Trigger shaft slotted |
| 06 | 53910107 | Trigger |

*Last updated version of the exploded view*

*This exploded view is not the material list of the gun*

# 3900 Plus sealant guns

## Sagola 3900 Plus M Spare parts

The Sagola 3900 Plus M sealant guns is covered by a **3-year** manufacturers warranty from SAGOLA.
Please follow the recommended housekeeping and maintenance procedure as prescribed in the operation manuals.

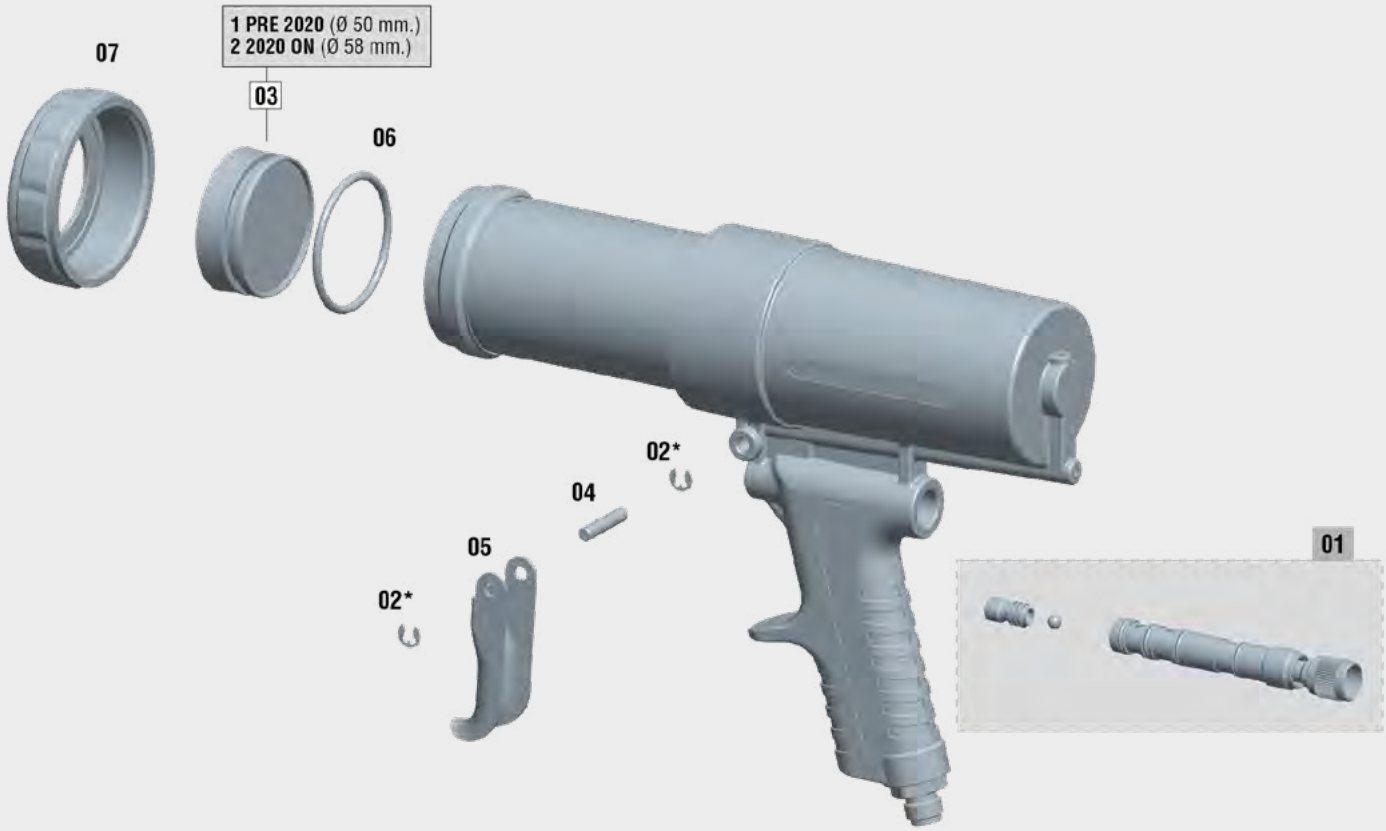


**SPARE PARTS** **3900 PLUS M**

| No. | Code | Description |
|---|---|---|
| 01 | 56417206 | Air valve Kit |
| 02 | 50850604 | Washer DIN 6799 RS 4 S. Steel |
| 03/1 | 52910204 | Sausage pushing disc Ø 50 mm. |
| 03/2 | 52910205 | Sausage pushing disc Ø 50.8 mm. |
| 04 | 53110905 | Trigger shaft slotted |
| 05 | 53910107 | Trigger |
| 06 | 54250999 | O-ring 44.20 x 3.00 nitrile |
| 07 | 57410110 | Front cover nut |

*Last updated version of the exploded view*

*This exploded view is not the material list of the gun*

# 518 Pro anti-gravel gun

## 518 Pro anti-gravel gun

Professional pressurized pneumatic gun for antigravel cartridges and underbody protection.

Total regulation on product flow and quality of atomization and spray size. Air inflow regulator.

Operating pressure. The cartridge container is made in anodized aluminum. It is light and sturdy. Needle regulator to control precisely the texturing. Very accurate depressurizing valve. It is easy to handle even with gloves.

Special air cap for cavity wax, that includes two types of dispensers. (OPTIONAL). Stainless steel silencer.

The 518 Pro works with low pressure and offers the maximum regulation options and productivity.

## TECHNICAL DATA

| | | 518 PRO |
|---|---|---|
| Dimensions | 22.8 x 10 x 36.5 cm. | 9 x 4 x 14.4” |
| Weight (empty) | 1.38 Kilograms | 3.02 lbs |
| Air consumption | 160 L/min. (at 3.5 bar) | 5.65 cfm (at 50.7 psi) |
| Working pressure | 2 - 4 bar | 29 - 58 psi |
| Maximum air inlet pressure | 10 bar | 145 psi |
| Connections | BSP 1/4” M | |

## VERSIONS / ACCESSORIES

| Description | Code |
|---|---|
| 518 PRO anti-gravel gun | **10330301** |
| Nozzles Kit + Gun adapter (Optional) | **56418705** |
| • Rosette nozzle | |
| • 360° nozzle | |

Optional special nozzle for small cavities

Gun adapter

# 518 Pro anti-gravel gun

## Sagola 518 Pro Spare parts

The Sagola 518 Pro anti-gravel gun is covered by a **3-year** manufacturers warranty from SAGOLA.
Please follow the recommended housekeeping and maintenance procedure as prescribed in the operation manuals.

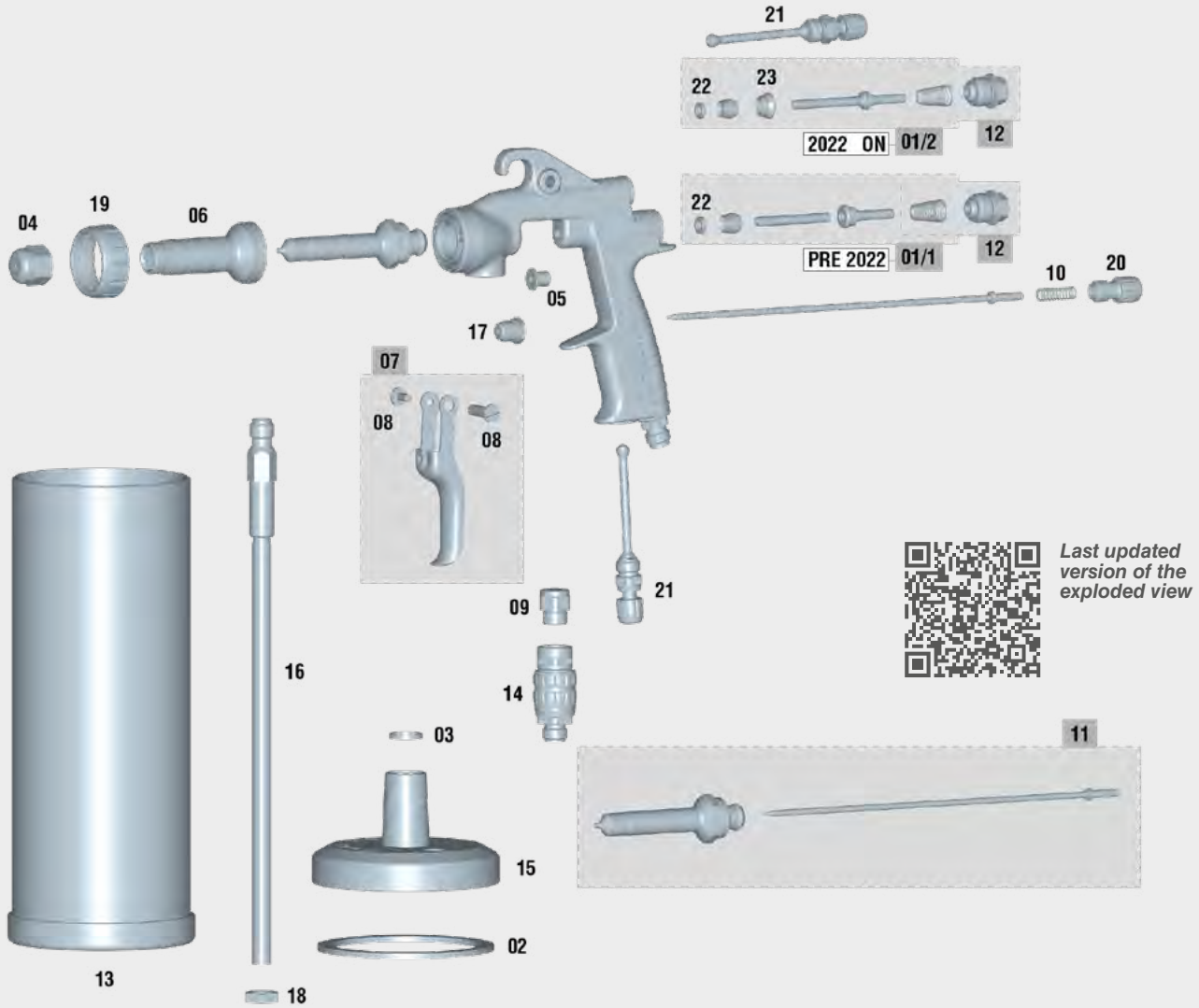


### SPARE PARTS 518 PRO

| No. | Code | Description |
|---|---|---|
| 01 | 56418481 | Air valve Kit |
| 02 | 56418703 | Deposit closed washer (5 units) |
| 03 | 50811017 | Deposit cover washer |
| 04 | 51410169 | Aircap |
| 05 | 51910608 | Trigger guide bushing |
| 06 | 52710048 | Aircap support body |
| 07 | 56418637 | Trigger Kit |
| 08 | 56418429 | Screw + trigger shaft (short) Kit |
| 09 | 55751904 | Brass silent connection 1/4" BSP |
| 10 | 56410072 | Spring + top |
| 11 | 10011199 | 2.00 Nozzle + Needle Kit |
| 12 | 56418701 | Guide box + conical spring Kit |
| 13 | 56412314 | Product deposit |

### SPARE PARTS 518 PRO

| No. | Code | Description |
|---|---|---|
| 14 | 56418519 | Air flow regulator 1/4” x19 M-F |
| 15 | 56416314 | Deposit cover |
| 16 | 56417009 | Suction tube 1/4” x19 |
| 17 | 57212211 | Prensaestopas aguja |
| 18 | 57410304 | Nut |
| 19 | 57410456 | Nut lock |
| 20 | 57810342 | Product regulator wheel (black) |
| 21 | 56415254 | Air regulator |

***This exploded view is not the material list of the gun***

# 416 anti-gravel gun

## 416 anti-gravel gun

Pneumatic gun for antigravel cartridges and underbody protection. Operation by suction.

Gun for the application of standardized acoustic insulation 1 L. cartridges. To be screwed directly to the cartridge.

Adjustable metallic aircap to control the quantity and texture of the product.

| TECHNICAL DATA | | 416 |
|---|---|---|
| Dimensions | 18.7 x 4.5 x 31.1 cm. | 7.4 x 1.8 x 12.2” |
| Weight (empty) | 0.52 Kilograms | 1.15 lbs |
| Air consumption | 160 L/min. (at 3.5 bar) | 5.65 cfm (at 50.7 psi) |
| Working pressure | 3 - 10 bar | 43.5 - 145 psi |
| Maximum air inlet pressure | 10 bar | 145 psi |
| Connections | BSP 1/4” M | |

| Description | Code |
|---|---|
| 416 anti-gravel gun | **20330401** |

Screwed directly to the cartridge

Adjustable metallic aircap

1/4” air inlet

# Classic S1 and Classic I Plus

## Classic S1 blowguns

Blowgun with body built in aluminum. Light but robust. Air inlet 1/4” male.

Three versions of the blow gun Classic S1:

- Classic S1 with metallic aircap.
- Classic S1 with extension aircap.
- Classic S1 with plastic aircap.

*Classic S1 Metallic*

| Code |
|---|
| 20340601 |

*Classic S1 Plastic*

| Code |
|---|
| 20340603 |

*Classic S1 Extension*

| Code |
|---|
| 20340604 |

## Classic S1 Venturi blowguns

Multiply the air flow X4 with the help of the Venturi system offered by this version of the Classic S1. Blowgun with body built in aluminum. Light but robust. Air inlet 1/4” male.

*Classic S1 Venturi*

| Code |
|---|
| 20340605 |

## Pocket blower

Small size blower. Pen-type clip. Adjustable flow. Quick disconnect connector.

*Pocket blower*

| Code |
|---|
| 40000336 |

### TECHNICAL DATA — Classic S1/Venturi/Blower

| | | Classic S1 | | Classic S1 Venturi | | Pocket blower | |
|---|---|---|---|---|---|---|---|
| Dimensions | Metallic | 11,7 x 2,5 x 15,3 cm. | 4,6 x 1 x 6” | 15.8 x 2.7 x 15.3 cm. | 6.2 x 1.06 x 6” | 113 mm. (close) 116 mm. (open) | 4.45” (close) 4.57” (open) |
| | Plastic | 11,7 x 2,5 x 15,3 cm. | 4,6 x 1 x 6” | | | | |
| | Extension | 20,6 x 2,5 x 15,3 cm. | 8,1 x 1 x 6” | | | | |
| Weight | | 190 g. / 187 g. / 198 g. 0.418 lbs / 0.413 lbs / 0.436 lbs | | 225 g. | 0,5 lbs | 23 g. | 0.05 lbs |
| Air inlet connection | | Connection 1/4” M | | Connection 1/4” M | | 1/4” M US-Mil | |
| Air consumption (at 6 bar) | | 240 L/min. | 8.5 cfm | 240 L/min. | 8.5 cfm | 450 L/min. | 15.9 cfm |
| Air flow ratio (air outlet) | | 1:1 | | 4:1 (925 L/min. - 33 cfm) | | 1:1 | |
| Working pressure | | 3 - 6 bar | 43.5 - 87 psi | 3 - 6 bar | 43.5 - 87 psi | 3 - 6 bar | 43.5 - 87 psi |
| Maximum air inlet pressure | | 10 bar | 145 psi | 10 bar | 145 psi | 10 bar | 145 psi |

## Inflating gun - pressure checker Classic I Plus

Professional inflating gun - pressure checker. Manufactured in aluminum. Maximum robustness and reliability. Shock-protected pressure gauge.

### TECHNICAL DATA — Classic I Plus

| | | |
|---|---|---|
| Dimensions | 23.4 x 9.8 x 13 cm. | 9.2 x 3.8 x 5.1” |
| Weight | 800 g. | 1,76 lbs |
| Hose length | 0.5 m. | 19.7” |
| Working pressure | 2 - 10 bar | 29 - 145 psi |
| Maximum air inlet pressure | 10 bar | 145 psi |
| Connections | BSP 1/4” M | |

| Code |
|---|
| 10310201 |

BLE 250

# Washers for guns and accessories

***A clean spray gun is a fundamental step to achieve higher quality work and longer useful tool life with the minimum maintenance.***

***But in workshop, adequate management and handling of solvents and cleaning products is also vital.***

***For the above reasons we at SAGOLA work hard to offer a professional range of spray gun cleaners.***

# Aquaplastic+ washer

## Aquaplastic+ water washer

The Sagola Aquaplastic+ washer is designed to clean spray guns and accessories when working with waterborne products.

Allows to clean easily of the dirty water, mixing it with the floculant through a pneumatic system. This way it separates completely the paint and pigment residues.

Easy to use. Minimum maintenance.

High robustness. Made of stainless steel.

*Brush with water for cleaning the exterior of the gun*

*Gun with coupling to clean interior areas*

*Blowgun for drying*

*Filter mat for residues and pump absorption filter*

| Code |
|---|
| 40000177 |

**REGULATIONS:**

2006/42/UE 2014/34/UE
ATEX Ex II 3G D
EN 12100:2010 EN 12921-3:2005 + A1:2008
EN 12921-2005 + A1:2010 EN ISO 13849-1:2008+AC:2009
EN 1127-1:2011 EN 13463-1:2009

## TECHNICAL DATA

| | | AQUAPLASTIC+ |
|---|---|---|
| Washer dimensions | 50 x 66 x 150 cm. | 19.7 x 26 x 59” |
| Weight | 40 Kg. | 88.2 lbs |
| Tank dimensions | 35.5 x 54 cm. (30 L) | 14 x 21.3” (7.92 galons) |
| Grid dimensions | 27.5 x 38.5 cm. | 10.8 - 15.2” |
| Maximum working unit weight | 5 Kg. | 11 lbs |
| Pump output | 5 L/min. | 0.18 cm |
| Working pressure | 6 - 7 bar | 87 - 102 psi |
| Certification | CE | |

# Compact 235 washer

## Compact 235 solvent washer

Designed to clean automatically spray guns and painting accessories when working with solvent-based paints and clearcoats.

Works with a recirculation solvent automatic cycle (timer) and with an automatic final cycle of clean solvent.

Equipped with dual automatic cleaning system, with reused and clean solvents, this latter can be dosed in a timed or manual.

Pneumatic blowing device to avoid the penetration of solvent into the interior of the gun.

High robustness. Made of stainless steel.

*Atomizer venturi*

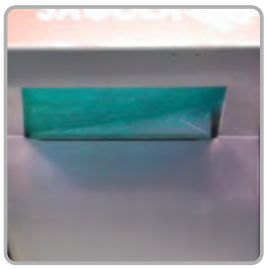

*Auto-extraction of solvent vapors.*

*Blowgun for drying the gun interior areas.*

*Brush for washing the gun exterior areas*

| Code |
|---|
| 40000522 |

**REGULATIONS:**

2006/42/UE 2014/34/UE
ATEX Ex II 3G D
EN 12100:2010 EN 12921-3:2005 + A1:2008
EN 12921-2005 + A1:2010 EN ISO 13849-1:2008+AC:2009
EN 1127-1:2011 EN 13463-1:2009

## TECHNICAL DATA

| | | COMPACT 235 |
|---|---|---|
| Washer dimensions | 53 x 70 x 152 cm. | 19.7 x 26 x 59” |
| Weight | 50 Kg. | 110 lbs |
| Sustainable load | 20 Kg. | 44 lbs |
| Washing area volume | 38 L | 10 galons |
| Washing area maximum weight | 5 Kg. | 11 lbs |
| Working pressure | 6 - 7 bar | 87 - 102 psi |
| Certification | CE | |

# Compact 220 washer

## Compact 220 solvent washer

Compact machine of small size, ideal for small paint shops.

Designed to automatically clean spray guns when working with solvent-based paints and clearcoats.

Equipped with dual automatic cleaning system, with reused and clean solvents; and two working modes; manual flush air nozzle to avoid the solvent entering the air inlet or automatic.

Pneumatic blowing device to avoid the penetration of solvent into the interior of the gun.

Made of stainless steel.

Pump absorption filter.

Easy to use. High robustness. Minimum maintenance.

*We can introduce two guns in the washing area.*

| Code |
|---|
| 40000199 |

*Opening handle, on/off and timer on the front door.*

**REGULATIONS:**

2006/42/UE 2014/34/UE
ATEX Ex II 3G D
EN 12100:2010 EN 12921-3:2005 + A1:2008
EN 12921-2005 + A1:2010 EN ISO 13849-1:2008+AC:2009
EN 1127-1:2011 EN 13463-1:2009

## TECHNICAL DATA

| | | COMPACT 220 |
|---|---|---|
| Washer dimensions | 48 x 55 x 100 cm. | 18.9 x 21.7 x 39.4” |
| Weight | 45 Kg. | 99 lbs |
| Washing area volume | 38 L | 10 galons |
| Sustainable load | 20 Kg. | 44 lbs |
| Washing area maximum weight | 5 Kg. | 11 lbs |
| Working pressure | 6 - 7 bar | 87 - 102 psi |
| Certification | CE | |

# S 25 washer

## S 25 solvent washer

Designed to clean automatically spray guns and painting accessories when working with solvent-based paints and clearcoats.

Compact machine of small size, ideal for workshops with little room.

100% Stainless Steel.

Venturi gas extraction system according to security standards. Avoid pollution and fumes in our paint box.

Absorption pump with filter + drain.

15 min. cycle timer with auto shut-off valve.

Door handle with auto shut-off valve (Safety).

*We can introduce two guns in the washing area*

*15 min. timer*

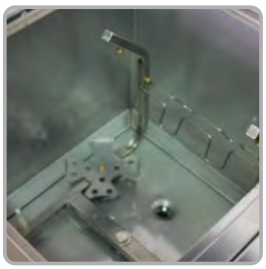

*Washing tank*

*Safety top cover*

| Code |
|---|
| 40000521 |

**REGULATIONS:**

2006/42/UE 2014/34/UE
ATEX Ex II 3G D
EN 12100:2010 EN 12921-3:2005 + A1:2008
EN 12921-2005 + A1:2010 EN ISO 13849-1:2008+AC:2009
EN 1127-1:2011 EN 13463-1:2009

## TECHNICAL DATA

| | | S25 |
|---|---|---|
| Washer dimensions | 50 x 55 x 98 cm. | 19.7 x 21.7 x 38.6” |
| Weight | 25 Kg. | 55 lbs |
| Washing area volume | 38 L | 10 galons |
| Sustainable load | 2 guns, 2 deposits and lids | |
| Washing area maximum weight | 5 Kg. | 11 lbs |
| Working pressure | 6 - 7 bar | 87 - 102 psi |
| Certification | CE | |

# Doble 250 washer

## Solvent/water Doble 250 washer

Meets all the advantages of the two most complete machines in the range Sagola: Sagola Aqua Plastic (water) and Sagola Compact 235 (solvent).

Designed with full equipment to offer an integrated solution offering optimum cleaning of guns which work with the new range of paints, waterborne basecoats and clearcoats and HS single stage paints.

100% Stainless Steel..

Solvent area: Recirculation solvent automatic cycle (timer). Automatic final cycle of clean solvent. Manual cleaning brush. Final cleaning with clean solvent spraying. Auto-extraction of solvent vapors.

Water area: Allows to clean easily of the dirty water, mixing it with the floculant through a pneumatic system. This way it separates completely the paint and pigment residues.Blowgun for drying.

| Code |
|---|
| 40000201 |

**REGULATIONS:**
2006/42/UE 2014/34/UE
ATEX Ex II 3G D
EN 12100:2010 EN 12921-3:2005 + A1:2008
EN 12921-2005 + A1:2010 EN ISO 13849-1:2008+AC:2009
EN 1127-1:2011 EN 13463-1:2009

*Atomizer venturi*

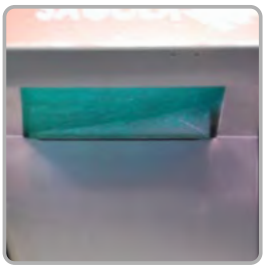

*Auto-extraction of solvent vapors*

*Gun with coupling for cleaning interior areas*

*Brush for washing the gun exterior areas*

*Blowgun for drying.*

*Filter mat for residues*

## TECHNICAL DATA

**DOBLE 250**

| | | | | | |
|---|---|---|---|---|---|
| Washer dimensions | 66 x 100 x 150 cm. | 26 x 39.4 x 59” | Weight | 90 Kg. | 198.4 lbs |
| Washing area volume | 50 L (solvent) 38 L (water) | | 13,2 Galons (solvent) 10 Galons (water) | | |
| Sustainable load | 2 guns | | | | |
| Water/solvent pump flow | 5 L/min. | | 0.18 cfm | | |
| Working pressure | 6 - 7 bar | | 87 - 102 psi | | |
| Certification | CE | | | | |

# Washer accessories

## Sagola washer accessories

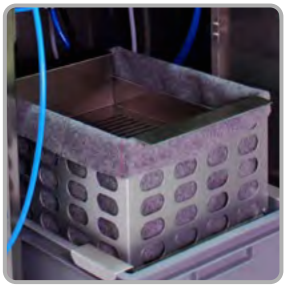
*Metallic*

*Plastic*

### Filter mat for residues

| Code | Description | Units |
|---|---|---|
| 49000071 | Filter mat Kit for plastic tank. Large | 5 |
| 49000115 | Filter mat Kit for metallic tank. Short | 5 |

*Valid for Aquaplastic+ and Double 250 Washers*

### Hot water kit

| Code | Models |
|---|---|
| 40000219 | Aquaplastic+ |

### Absorption pipe

| Code | Models |
|---|---|
| 49000495 | 220/235/250/AP+ |

### Blowgun with hose

| Code | Models |
|---|---|
| 49000089 | 235/250/AquaP+ |

### Spray gun holding clips

| Code | Units |
|---|---|
| 49000093 | 2 |

### Water brush

| Code | Models |
|---|---|
| 49000097 | 220/235/250/AP+ |

### Water gun with hose

| Code | Models |
|---|---|
| 49000074 | 250/AquaP+ |

### Aqua Cleaner

Detergent for spray gun washers. 5 liters.

| Code |
|---|
| 40000205 |

### Pump absorption filter

| Code | Models |
|---|---|
| 49000489 | 235/250/AquaP+ |

### Floculant agent

Solidification (precipitation) of the paint residues in the water for later filtering. 1 kg

| Code |
|---|
| 55550047 |

# Infra-reds and drying systems

***Most of the repairs in workshops are small and medium bumps, mainly in the front, rear and side parts.***

***Traditionally cabin room for drying small areas of the bodywork is used and can cause problems bottleneck in situations of great workflow.***

***Contrary to booths, infrared dryers demonstrate more effective on small areas of the bodywork as they allow the application of heat directly on the treated part.***

# Dry Tech Infra-reds

At Sagola we have developed a line of shortwave infrareds made with the best materials and under the strictest quality controls. This new generation of short-wave infrared dryers is ideal for quick bodywork services and to increase the production capacity of all types of workshops.

Available in analog and digital version, incorporate the proximity detection system (PDS) which, together with a simple digital control panel, make use of the equipment is simple and safe.

## Profitability of use

Most of the repairs in workshops are small and medium bumps, mainly in the front, rear and side parts.

Traditionally cabin room for drying small areas of the bodywork is used and can cause problems bottleneck in situations of great workflow.

Contrary to booths, infrared dryers demonstrate more effective on small areas of the bodywork as they allow the application of heat directly on the treated part.

## Wave length

Infrared systems emit different types of waves: long, medium and short.

The fundamental difference between them is the depth of penetration through the paint film, being shortwave that reaches the highest penetration.

Our equipments use this type of wave, since it reduces drying time and energy consumption.

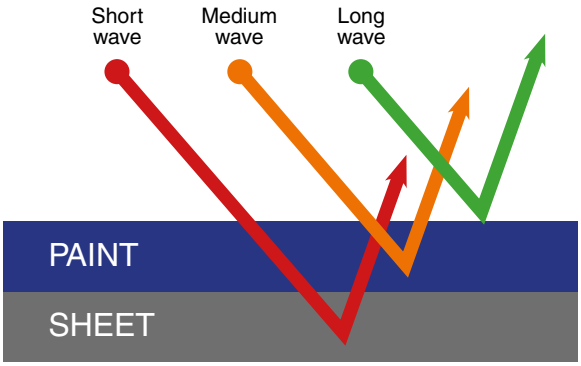


## Drying times

| APPLICATION | DRY TECH INFRA-REDS | OVEN CABIN | AIR DRY |
|---|---|---|---|
| GUN APPLIED FILLER | **8 - 10 min.** | 10 - 20 min. | 30 - 60 min. |
| PRIMER / FILLER | **8 - 12 min.** | 30 - 45 min. | 240 min. |
| SINGLE STAGE COLOR PAINT | **8 - 10 min.** | 30 - 45 min. | 240 min. |
| H.S. COLOUR | **8 - 10 min.** | 30 - 45 min. | 210 min. |
| CLEARCOAT | **8 - 12 min.** | 30 - 45 min. | 240 min. |

# Dry Tech Infra-reds

## Dry Tech DT3 Infra-red

Short-wave infrared and filtered light with 96.8% efficiency. With an articulated arm with compensation gravity by locking gas spring.

Three screens with independent power. Positioning System lock screens in all movements.

With wheels for easy transport. Brake on the rear wheels.

With all these features, the DT3 infrared is capable of covering any part of the bodywork.

Controls through a digital display. Light intensity adjustment, from 40% to 100%. Drying mode: automatic, intermittent or permanent.

Automatic distance sensor. Alert when the distance to the bodywork is too small.

*Electronic control*

*Shortwave infrared double-layer halogen lamps, specially designed for curing body paint*

| Code |
|---|
| 40000533 |

**REGULATIONS:**
2014/30/UE
2014/35/UE

*With automatic distance sensors, the system alerts you when the emitter and panel are too close*

### TECHNICAL DATA

| | DT3 | |
|---|---|---|
| Voltage / Frequency | 220 V / 50-60 Hz | |
| Maximum power | 3 x 1,100 w | |
| Maximum height (horizontal screens - floor) | 205 cm. | 80.7” |
| Drying surface | 100 x 120 cm. | 39.4 - 47.2” |
| Working minimum distance | 50 cm. | 19.7” |
| Time setting (timer) | 0 - 99 min. | |
| Temperature setting | 40 - 100°C | 104 - 212°F |
| Certification | CE | |

# Dry Tech Infra-reds

## Dry Tech DT6 Infra-red

Short-wave infrared and filtered light with 96.8% efficiency. With an articulated arm with compensation gravity by locking gas spring.

Six screens with independent power. Positioning System lock screens in all movements.

With wheels for easy transport. Brake on the rear wheels.

With all these features, the DT6 infrared is capable of covering any part of the bodywork.

Controls through a digital display. Light intensity adjustment, from 40% to 100%. Drying mode: automatic, intermittent or permanent.

Automatic distance sensor. Alert when the distance to the bodywork is too small.

*Electronic control*

*Shortwave infrared double-layer halogen lamps, specially designed for curing body paint*

**REGULATIONS:**
2014/30/UE
2014/35/UE

| Code |
|---|
| 40000532 |

*With automatic distance sensors, the system alerts you when the emitter and panel are too close*

## TECHNICAL DATA

| | DT6 | |
|---|---|---|
| Voltage / Frequency | 220 V / 50-60 Hz | |
| Maximum power | 6 x 1,100 w | |
| Maximum height (horizontal screens - floor) | 205 cm. | 80.7” |
| Drying surface | 100 x 180 cm. | 39.4 - 70.9” |
| Working minimum distance | 50 cm. | 19.7” |
| Time setting (timer) | 0 - 99 min. | |
| Temperature setting | 40 - 100°C | 104 - 212°F |
| Certification | CE | |

# Dry Tech Infra-reds

## Dry Tech DT2 Infra-red

Short-wave infrared and filtered light with 96.8% efficiency. Height adjustable. Recommended for preparation tasks and retouche. Ideal for workshops with little work space.

Two screens with independent power. Positioning System lock screens in all movements. Possibility of orienting the screens in a horizontal position.

With wheels for an easy transport.

Compact individual knob control with timer. Easy to use.

| Code |
|---|
| 40000534 |

**REGULATIONS:**
2014/30/UE
2014/35/UE

| TECHNICAL DATA | DT2 | |
|---|---|---|
| Voltage / Frequency | 220 V / 50-60 Hz | |
| Maximum power | 2 x 1,100 w | |
| Maximum height (horizontal screens - floor) | 150 cm. | 59” |
| Drying surface | 80 x 80 cm. | 31.5 - 31.5” |
| Working minimum distance | 50 cm. | 19.7” |
| Time setting (timer) | 0 - 60 min. | |
| Certification | CE | |

*Individual, compact and easy-to-use command control*

*Shortwave infrared double-layer halogen lamps, specially designed for curing body paint*

## Dry Tech infra-reds accessories

### DT2 clamp

| Code |
|---|
| 49000773 |

### DT2/3/6 lever

| Code |
|---|
| 49000777 |

### DT2 wheel

| Code | Version |
|---|---|
| 49000779 | Without brake |
| 49000778 | With brake |

### IR lamp 1,100 w

| Code | Version |
|---|---|
| 49000775 | DT3/6 |
| 49000776 | DT2 |

### DT3/6 Gas shock absorber

| Code | Version |
|---|---|
| 49000763 | DT3 |
| 49000762 | DT6 |

### DT3/6 wheel

| Code | Version |
|---|---|
| 49000765 | Without brake |
| 49000764 | With brake |

# Dry Tech DT3 Infra-red

## Sagola Dry Tech DT3 Spare parts

The Sagola Dry Tech DT3 infra-red is covered by a **3-year** manufacturers warranty from SAGOLA.
Please follow the recommended housekeeping and maintenance procedure as prescribed in the operation manuals.

*This exploded view is not the material list of the infra-red*

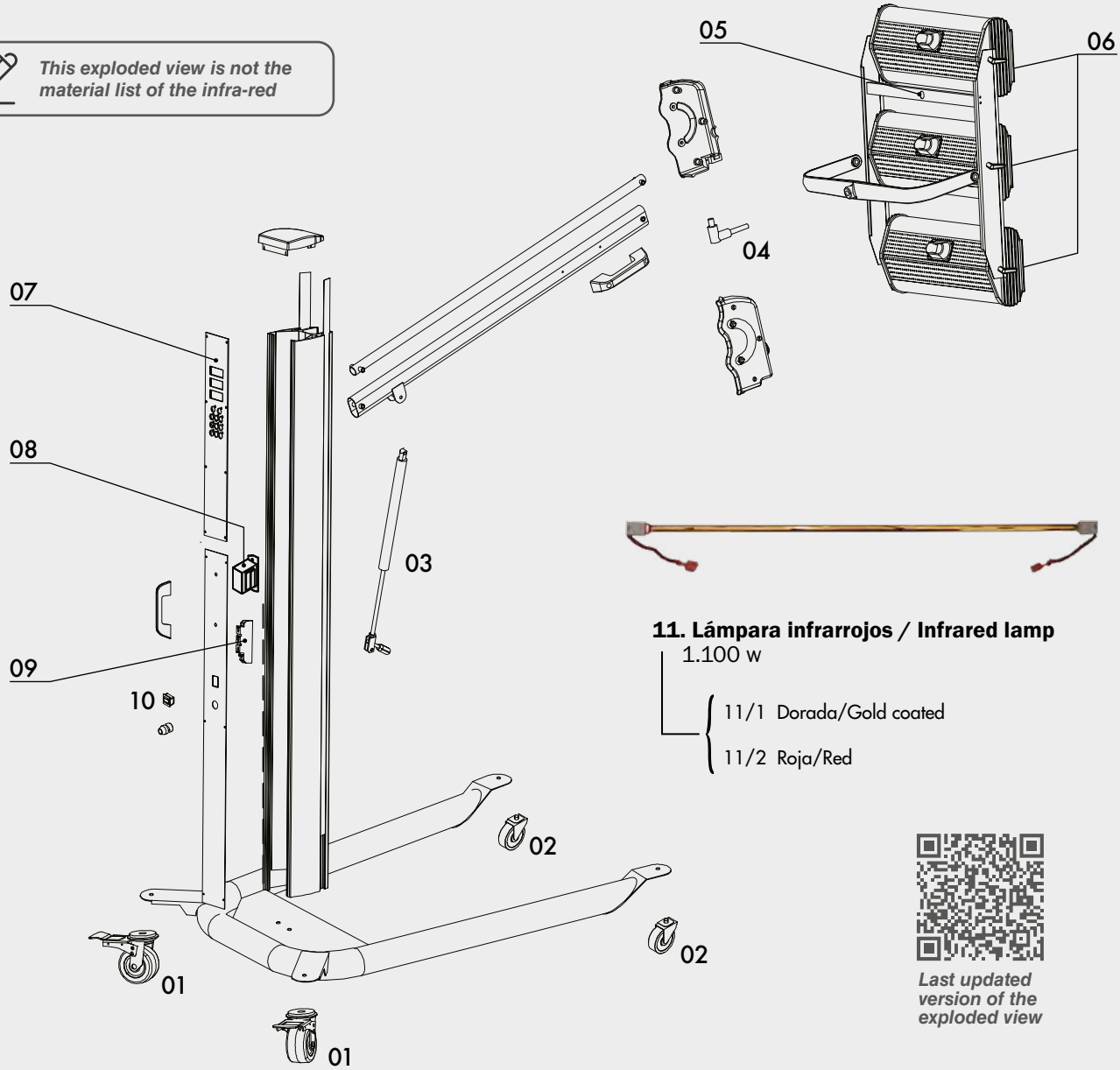


**11. Lámpara infrarrojos / Infrared lamp**
1.100 w
- 11/1 Dorada/Gold coated
- 11/2 Roja/Red

*Last updated version of the exploded view*

### SPARE PARTS — DT3

| No. | Code | Description |
|---|---|---|
| 01 | 49000764 | Wheel with break |
| 02 | 49000765 | Wheel without break |
| 03 | 49000763 | Gas buffer with locker |
| 04 | 49000774 | Screen connecting axe |
| 05 | 49000760 | Distance sensor |
| 06 | 49000777 | Lever |

### SPARE PARTS — DT3

| No. | Code | Description |
|---|---|---|
| 07 | 49000780 | Electric control board (220V) |
| 08 | 49000769 | Transformer (220V) with sensor |
| 09 | 49000767 | Solid state relay (220V) |
| 10 | 49000770 | Power switch |
| 11/1 | 49000775 | Gold coated lamp 1,100 w |
| 11/2 | 49000784 | Red Lamp 1,100 w |

# Dry Tech DT6 Infra-red

## Sagola Dry Tech DT6 Spare parts

The Sagola Dry Tech DT6 infra-red is covered by a **3-year** manufacturers warranty from SAGOLA.
Please follow the recommended housekeeping and maintenance procedure as prescribed in the operation manuals.

*This exploded view is not the material list of the infra-red*

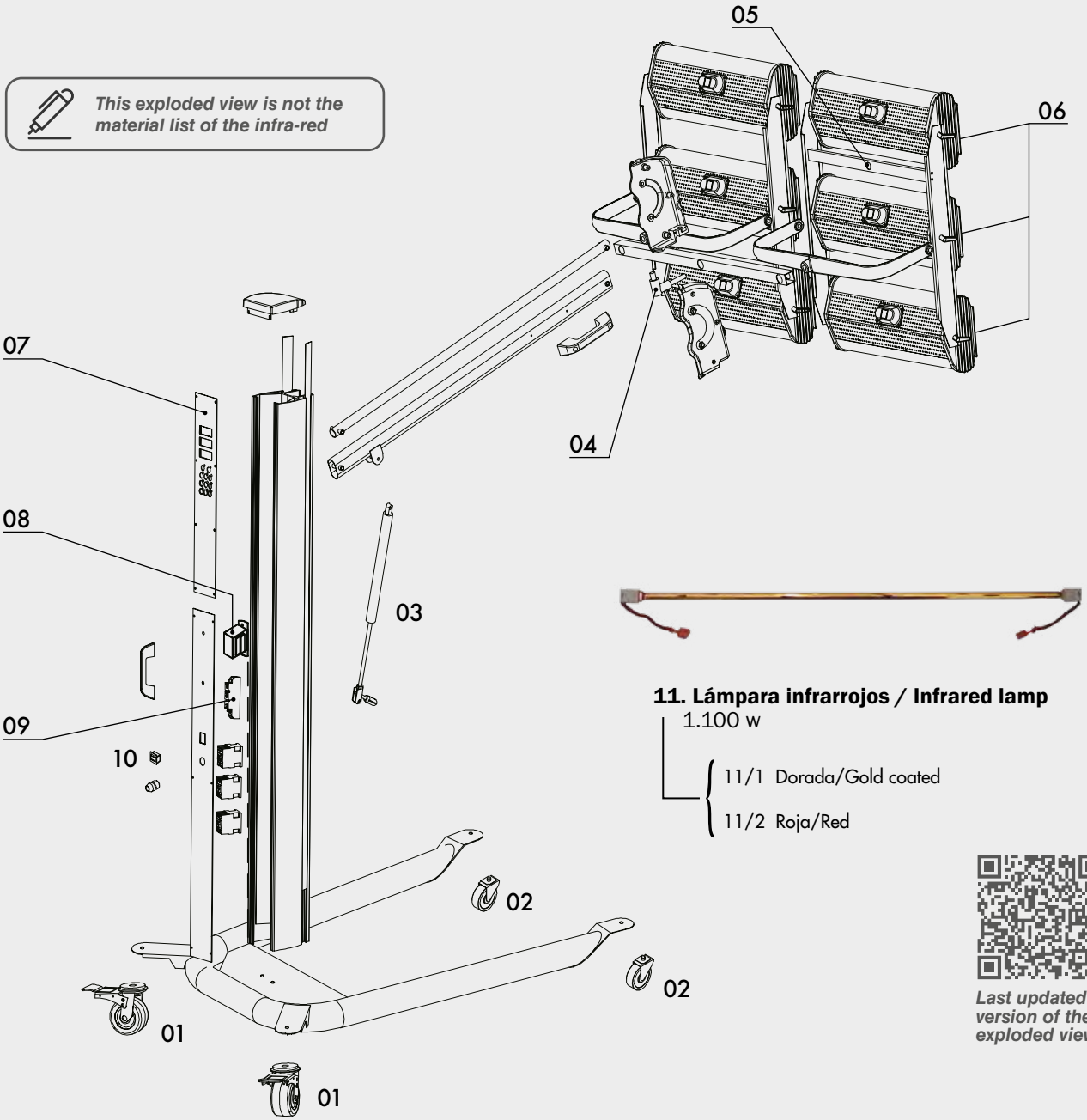


**11. Lámpara infrarrojos / Infrared lamp**
1.100 w
- 11/1 Dorada/Gold coated
- 11/2 Roja/Red

*Last updated version of the exploded view*

### SPARE PARTS — DT6

| No. | Code | Description |
|---|---|---|
| 01 | 49000764 | Wheel with break |
| 02 | 49000765 | Wheel without break |
| 03 | 49000762 | Gas buffer with locker |
| 04 | 49000774 | Screen connecting axe |
| 05 | 49000760 | Distance sensor |
| 06 | 49000777 | Lever |

### SPARE PARTS — DT6

| No. | Code | Description |
|---|---|---|
| 07 | 49000772 | Electric control board (380V) |
| 08 | 49000768 | Transformer (380V) with sensor |
| 09 | 49000766 | Solid state relay (380V) |
| 10 | 49000770 | Power switch |
| 11/1 | 49000775 | Gold coated lamp 1,100 w |
| 11/2 | 49000784 | Red Lamp 1,100 w |

# Super Flow drying gun

## Drying gun with Venturi system

Includes venturi regulator to adapt drying technique to the coated surface, retouched area or entire part.

Achieves far superior performance than any other waterborne paints dryer.

Can be fully dismantled to facilitate cleaning and proper maintenance (avoiding pollution).

Thanks to the Venturi system, reduce drying time with an air outlet flow of 6,000 liters per minute.

Larger volume of air outlet for rapid water evaporation.

Exclusive Venturi Regulator.

**REGULATIONS:**
2014/34/CE
ATEX Ex II 2G x
2006/42/CE
UNE-EN ISO
80079-36:2017

| TECHNICAL DATA | | SUPER FLOW |
|---|---|---|
| Dimensions | 11.5 x 6.5 x 20 cm. | 4.5 x 2.56 x 7.87” |
| Air inlet connection | BSP 1/4” M | |
| Air filter | 40 mesh (Stainless steel) | |
| Working pressure | 3 - 6 bar | 43.5 - 87 psi |
| Maximum air flow | Up to 6,000 L/min. | Hasta 212 cfm |
| Air consumption | 300 - 600 L/min. | 10.6 - 21.2 cfm |
| Application distance | 50 - 80 cm. | 19.7 - 31.5” |
| Weight | 580 g. | 1.28 lbs |

### VERSIONS

| Description | Code |
|---|---|
| Super Flow drying gun | **10340401** |

## Exclusive DISASSEMBLY system for cleaning

*1 Step*

*2 Step*

*3 Step*

*4 Step*

*5 Step*

# Classic Venturi drying gun

## Drying gun with Venturi system

Very light drying gun that facilitates work in the workshop.

High ergonomics for a better adaptation to the hand.

High performance. Special drying gun for waterborne products.

Thanks to the Venturi system, reduce drying time.

Larger volume of air outlet for rapid water evaporation.

Built with valve and air filter.

Multiple adaptability.

**REGULATIONS:**
2014/34/CE
ATEX Ex II 2G x
2006/42/CE
UNE-EN ISO
80079-36:2017

### VERSIONS

| Description | Code |
|---|---|
| Classic Venturi drying gun | **40000297** |
| Venturi Classic Stand<br>+ 2 Classic Venturi drying guns | **40000244** |

| TECHNICAL DATA | VENTURI CLASSIC | |
|---|---|---|
| Dimensions | 22 x 12 x 8 cm. | 8.7 x 4.7 x 3.1” |
| Air inlet connection | BSP 1/4” M | |
| Working pressure | 3 - 6 bar | 43.5 - 87 psi |
| Maximum air flow | Up to 5,000 L/min. | Hasta 176 cfm |
| Air consumption | 300 - 600 L/min. | 10.6 - 21.2 cfm |
| Weight | 561 g. | 1.24 lbs |

## Venturi Classic Stand

Support for two drying guns. Three support points to the ground for better stability.

Adjustable height for better access to parts.

2 mobile arms for two drying guns. Horizontally and vertically movable arms.

Light but robust.

Easy installation and assembly.

| Code |
|---|
| 40000243 |

| TECHNICAL DATA | VENTURI CLASSIC STAND | |
|---|---|---|
| Dimensions | 60 x 160 cm. | 23.6 x 63” |
| Maximum height | 210 cm. | 82.7” |
| Arm length | 60 cm. | 23.6” |
| Weight | 8 Kg. | 17.6 lbs |

SAGO

# 10®

# Personal protection

***Protective masks for sanding and painting processes, anti-static painters' overalls...***

***One of SAGOLA's main concerns is to assure optimum, safe working conditions for all.***

# Anti-static coverall

## Sagola anti-static coverall

Antistatic coveralls of high comfort. Breathable.

Ventilation systems with slots in the back and in the armpits.

Adjustable hood with elastic band and velcro. Press-buttons neck closure. Adjustable feet closure. Large comfortable elastic wrist closures.

2-way zip and flap fitted. Includes 2 chest pockets, 2 side pockets, 1 hip pocket and 1 inside pocket.

Original Dupont Teflon coating (water repellent and dirt-resistant).

Silicone and lint free.

*Teflon non-stick coating*

*Antistatic coverall*

### TECHNICAL DATA

| | |
|---|---|
| Composition | 98% polyester, 2% carbon |
| Washing temperature | 30°C (86°F) or chemical cleaning |
| Protection | PPE CAT.I |
| Antistatic fabric | EN 1149-5:2018 |
| Serigraphy | Black Sagola logo (On the back and pocket of the chest) |

## Black Sagola anti-static coverall

Antistatic coverall that protects from general dirt that occurs when spraying paints. Prevents contamination of the painted surface by dust and fluff.

Black in color with red decorative stripes. High-quality zipper with rubber puller. Hood with elastic band.

Breathable fabric on the back. Breathable mesh inserts under the arms and in the crotch.

Chest pocket with protective flap and Velcro closure. 2 side pocket for hands with protective strip and velcro closure. Back pocket. Comfortable nylon wristbands and elasticated ankle waistband.

*Antistatic coverall*

### TECHNICAL DATA

| | |
|---|---|
| Composition | 100% polyester |
| Washing temperature | 40°C (104°F) or chemical cleaning |
| Protection | PPE CAT.I |
| Antistatic fabric | EN 1149-1:2006 |
| Serigraphy | White Sagola logo (On the back, chest pocket and leg) |

### VERSIONS

| Description | Size | UE size | Code | Code |
|---|---|---|---|---|
| XS Sagola anti-static coverall | XS | 38/40 | **40000523** | - |
| S Sagola anti-static coverall | S | 42/44 | **40000524** | - |
| M Sagola anti-static coverall | M | 46/48 | **40000525** | **40000536** |
| L Sagola anti-static coverall | L | 50/52 | **40000526** | **40000537** |
| XL Sagola anti-static coverall | XL | 54/56 | **40000527** | **40000538** |
| XXL Sagola anti-static coverall | XXL | 58/60 | **40000528** | - |
| XXXL Sagola anti-static coverall | XXXL | 62/64 | **40000529** | - |

# 4240 breathing equipment

**REGULATIONS:**
BS EN 1835
Protection: 40 factor
EC Certificate No. 58459
BSi Product Certificate

## Complet breathing equipment

Complete maximum protection breathing equipment that includes: Belt, preset regulator incorporating warning gauge with high efficiency coalescing filter and activated carbon filter to remove low levels of moisture and oil, which absorbs vapor and odour. 10 meters of hose and safety plugs, 1.5 meter of hose spray gun outlet.

High quality breathing equipment that meets BS EN 1835 standards, with a protection factor of 40. EC Certificate nº 58459, issued by BSi Product Certificate.

Regulation: 89/686/CEE (EPI)

*Hose kit: 10 m. de ose with safety plug, 1.5 m. of hose spray gun outlet.*

### TECHNICAL DATA — 4240 BREATHING EQUIPMENT

| | | |
|---|---|---|
| Air pressure | 4 - 10 bar | 58 - 145 psi |
| Mask air flow | 160 - 232 L/min. | 5.65 - 8.19 cfm |
| Hose length | 10 m. (supply to regulator) | 39.4” |
| Working temperature range | 1.5°C - 50°C | 34.7°F - 122°F |
| Filter | 0.01 µm | |
| Filter life | 400 hours | |

### VERSIONS / ACCESSORIES

| Description | Connection | Code |
|---|---|---|
| 4240 Mask + Hose Kit | US-Mil | **15830101** |
| 4240 Mask + Hose Kit | Nitto | **15830102** |
| 4240 Mask | US-Mil | **15830103** |
| 4240 Mask | Nitto | **15830104** |
| Visor 10 units | **Spare part** | **15880013** |
| Charcoal filter | **Spare part** | **15880015** |
| Acetate screen kit | **Spare part** | **15880011** |

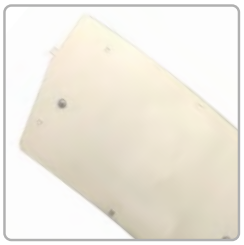

*Acetate screen*

*Visor*

***When used with spraygun, 620 L/min at 6 bar will be required***

# MP300 breathing mask

## MP300 breathing mask

The MP300 mask and A1 filter set has been designed to provide maximum protection against inhalation of organic products with a boiling point over 65°C, without inconveniencing users in any way, enabling them to carry out their work in complete comfort.

The set adapts perfectly to all kinds of expressions and movements, always providing the highest possible level of protection.

The set is made up of a mask and two filters and covers the user's nose, mouth and chin. It is manufactured using light, highly resistant materials that do not have any harmful effects on users' health and hygiene.

The main body of the mask is made from soft natural rubber.

The mask is fitted with an exhaling valve made up of a valve-holder and a membrane, which makes it easier for exhaled air to escape.

It has a comfortable neck strap and head strap that can be easily adjusted to the right length.

**REGULATIONS:**
EN 140: 1998, EN 143:2000/A1:2006,
EN 14387:2004/A1:2008
Control agency No. 0082

## TECHNICAL DATA

**MP300 BREATHING MASK**

| | | |
|---|---|---|
| Breathing resistance Flujo sinusoidal 25 x 2 L/min: | A la inhalación: | 2.00 mbar |
| | A la exhalación: | 3.00 mbar |
| Breathing resistance Continuous flow inhalation | At 30 L/min. (1.06 cfm): | 0.50 mbar (0.007 psi) |
| | At 95 L/min. (3.35 cfm): | 1.30 mbar (0.019 psi) |
| $CO_2$ Content (dead space) | 1.00 % | |
| Leaks to inside (tightness) | < 5.00 % | |

## VERSIONS / ACCESSORIES

| Description | | Code |
|---|---|---|
| MP300 Mask | | **14810301** |
| Filter 10 units | **Spare part** | **56418052** |

*Filter spare parts*

# FFP2 mask

**REGULATIONS:**
UNE-EN 149:2001 + A1:2009 (FFP2)
Directive EPI UE 2016/425

## M200/M210 mask
## FFP2 Protection

M200 and M210 self-filtering paper masks with FFP2 level protection. These masks are designed for protection against solid and liquid particles of low and medium toxicity.

Suitable for use against non-ferrous metal dust, metal welding fumes, gases and mists of different materials such as lead, aluminum and manganese.

The mask body contains a flexible metal bar for a perfect fit in the nose area.

Adjustment to the head by double elastic band.

**The M210 mask incorporates an exhalation valve to make breathing easier.**

### VERSIONS

| Description | Units/Box | Code |
|---|---|---|
| M200 Mask | 20 | **40000263** |
| M210 Mask (with valve) | 10 | **40000264** |

*Sanding*

*Painting*

***The mask can be used in pollution concentrations up to 10 times the Occupational Exposure Limit (OEL).***

Spray Gun
Locker
www.sagola.com
SAGOLA
190 MICRON
SAGOLA
SAGOLA

# 11

# Accessories and workshop complements

***Manage the waste disposal costs with Sagola's range of can and cardboard crushers.***

***Essential ancillary items for your Bodyshop and spray booth.***

***Sagola has you covered with our extensive range of paint preparation, masking and general housekeeping products***

# L range pneumatic sanders

**REGULATIONS:**
2006/42/EC
ISO 12100:2010
ISO 11148-8:2011

## L range pneumatic sanders

L range sanders have been designed for workshops where high performance and top quality finishes are demanded.

High performance Orbital pneumatic sanders. Light, compact and powerful. Profiled composite casing, comfortable and long-lasting.

With 360° rotatable rear air outlet, directing the air away from the operator. It is easily connected to central or portable extraction systems.

The L505 sander has been designed for quick grinding down, with a good quality surface finish.

The L252 is a sander which ensures high quality finishes without leaving any kind of marks on the surface.

And the L252R sander which ensures precision sanding and top quality finishing. It is ergonomic and light, perfect for those small retouches.

If you are looking for scratch-free quality, you can trust the L range. Due to the lubricant-free design, there is no concern about substrate contamination.

| TECHNICAL DATA | L252 | | L505 | | L252R | |
|---|---|---|---|---|---|---|
| Motor power | 2 C.V. | | 2 C.V. | | 2 C.V. | |
| Free speed | 12,000 r.p.m. | | 12,000 r.p.m. | | 12,000 r.p.m. | |
| Air consumption (4.5 bar - 65 psi) | 280 L/min. | 9.9 cfm | 280 L/min. | 9.9 cfm | 280 L/min. | 9.9 cfm |
| Maximum air consumption (6 bar - 87 psi) | 380 L/min. | 13.42 cfm | 380 L/min. | 13.42 cfm | 380 L/min. | 13.42 cfm |
| Air inlet | BSP 1/4" H | | BSP 1/4" H | | BSP 1/4" H | |
| Recommended minimum hose Ø | Ø 8 mm. (0.31") | | Ø 8 mm. (0.31") | | Ø 8 mm. (0.31") | |
| Net weight | 0,87 Kg. | 1.92 lbs | 0.87 Kg. | 1,92 lbs | 0.84 Kg. | 1.85 lbs |
| Total length | 118 mm. | 4.65" | 118 mm. | 4.65" | 110 mm. | 4.33" |
| Oscilation | 2.5 mm. | 0.1" | 5 mm. | 0.2" | 2.5 mm. | 0.1" |

## VERSIONS / ACCESSORIES

| Description | | Code |
|---|---|---|
| L252 sander | | 40000231 |
| L505 sander | | 40000232 |
| L252 R sander | | 40000230 |
| Sand Disck Ø 75 mm. (2.95") (Velcro) | Spare part | 49000220 |
| Sand Disck Ø 152 mm. (6") (Multiholes, Velcro) | Spare part | 49000501 |

*Sand Disck*

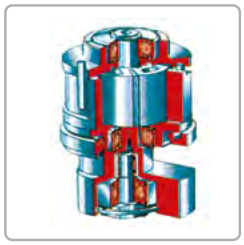

*Composite impellers and rotor Lubrication-free, works without oil. Counterweight system to guarantee smooth operation.*

# 1200X polisher

**REGULATIONS:**
2006/42/EC
2004 /108/EC
EN 60745-1:2009 + A11:2010
EN 60745-2-3:2011 + A2:2013 + A11:2014 + A12:2014

## 1200X polisher

Electronic angular electric polisher. Multipurpose polisher with smooth start and constant speed control.

It has reversible auxiliary handle, upper handle (type G), On/Off switch. M14 universal anchor.

Recommended for bodyshop polishing, furniture, paints and varnishes.

Supplied in a practical carrying case.

*Transport case*

| TECHNICAL DATA | 1200X POLISHER | |
|---|---|---|
| Power | 1,200 w | |
| Voltage | 240 V / 50 Hz | |
| Adjustable speed | 600 - 3,000 r.p.m. | |
| Disck dimensions | Ø 180 mm. | Ø 7” |
| Weight | 3.2 Kg. | 7.05 lbs |

## VERSIONS / ACCESSORIES

| Description | | Code |
|---|---|---|
| Sagola 1200X Polisher | | 40000507 |
| Polishing beret | Spare part | 49000109 |
| Polishing plate | Spare part | 49000110 |

*Polishing beret*

*Polishing plate*

# Bodyshop racks

## Rotating panel rack

Rack for bodyshop parts painting and sanding, very stable and fully adaptable.

Parts can be adjusted to the desired angle and height.

Lower tray for accessories.

Wheels with foot-brake for the turning system.

| Code |
|---|
| 40000251 |

### TECHNICAL DATA

| | | |
|---|---|---|
| Maximum load weight | 91 Kg. | 200 lbs |
| Rack weight | 10 Kg. | 22 lbs |

## Scissor rack

Holder for parts under repair or painting with sponge rollers to avoid damage to parts.

Curved legs designed for use on grid floors.

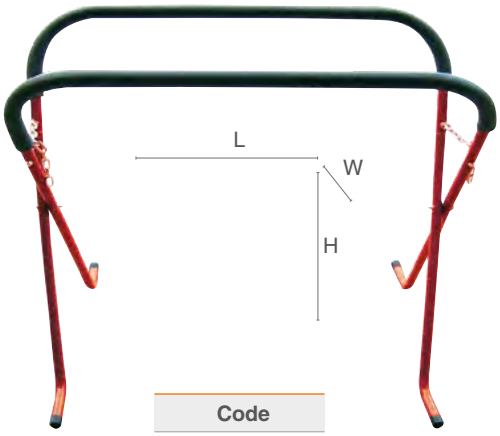


| Code |
|---|
| 40000250 |

### TECHNICAL DATA

| | | |
|---|---|---|
| Length (L) | 106 mm. | 4.17” |
| Width (W) | 36 - 85 mm. | 1.42 - 3.35” |
| Height (H) | 57 - 105 mm. | 2.24 - 4.13” |
| Weight | 4 Kg. | 8.8 lbs |
| Maximum load weight | 226 Kg. | 498 lbs |

## Triple Mask paper roll holder

Mobile masking paper roll holders with wheels to facilitate transport and laminated cutting edge for easy use.

Includes masking tape dispenser.

| Code |
|---|
| 40000238 |

### TECHNICAL DATA

| | | |
|---|---|---|
| Roll dimensions | 35 / 60 / 90 cm. | 13.8 / 23.6 / 35.4” |
| Weight | 4 Kg. | 8.8 lbs |

## Can Crusher

Significant space saving and cost reduction in waste management.

Designed to solve residue storage and disposal problems in places like bodyshops, industrial workshops, garages, etc...

Top load. Greater working comfort.

Valid for cylindrical recipients up to 25L. (maximum height 45 cm. and 31 cm. diameter).

| Code |
|---|
| 40000314 |

## Can and carton crusher

Two accesses:

> Upper: loads cardboard and paper.

> Lower: unloads cardboard, loads cans.

Reel of string at rear to tie the crushed bundles of paper and cardboard.

| Code |
|---|
| 40000315 |

| TECHNICAL DATA | Can Crusher | | Can and carton crusher | |
|---|---|---|---|---|
| Dimensions | 54 x 51 x 146 cm. | 21.3 x 20.1 x 49.6” | 60 x 75 x 175 mm. | 23.6 x 29.5 x 68.9” |
| Weight | 185 Kg. | 408 lbs | 225 Kg. | 496 lbs |
| Cylinder (Stroke) | 500 mm. | 19.7” | 600 mm. | 23.6” |
| Ø Cylinder | 160 mm. | 6.3” | 160 mm. | 6.3” |
| Pressing power | > 1,600 Kg. | > 3,527 lbs | > 1,600 Kg. | > 3,527 lbs |
| Internal volume | - | - | approx. 210,000 c.c. | approx. 55.47 gal |
| Working pressure | 8 bar | 116 psi | 8 bar | 116 psi |
| Control / Safety system | Pneumatic | | Pneumatic | |

# Consumables

# SAGOLA DPC™

## DISPOSABLE PAINT CUP SYSTEM

***The Sagola DPC™ Disposable Paint Cup System by Sagola offers a cost effective, time saving, quick colour change solution for today's busy spray shop professionals.***

***Tough Plastic ABS Cup***
with integrated measuring guides. Available in a range of volumes from 100ml - 800ml (3.38 - 27 fl oz).

***Disposable Liner***
recyclable and designed to collapse evenly.

***Domed Lid & Filter***
integrated, full diameter filter for consistent paint flow.

***Screw Collar***
with integrated cup seal.

***Adaptor***
with enhanced twist lock connector. Compatible with all Sagola spray guns.

***Cup Seal Plug***
for storing paint whilst not in use.

# Consumables

## Easy to Clean

Compared to traditional gravity cups the Sagola DPC™ System significantly reduces cleaning time and solvent use.

## Easy to Use

On cup ratios and fill markings reduce the reliance on traditional mixing cups, just fill, mix and spray!

## Easy to Store

To store unused paint between coats simply fit the Cup Seal Plug and store upside down to keep the filter wet.

## Easy to Change

With a range of adaptors to fit Sagola Gravity Spray Guns as well as other manufacturers' guns, starting to use Sagola DPC™ System couldn't be easier.

# DPC™ Technical Data/ Versions

| CUP | LID | LINER | COLLAR | PLUG | Code DPC™ |
|---|---|---|---|---|---|
| 100 ml. | 125 µm | 100 ml. | | | 52850101 |
| | 190 µm | 100 ml. | | | 52850102 |
| 200 ml. | 125 µm | 200 ml. | | | 52850103 |
| | 190 µm | 200 ml. | | | 52850104 |
| 400 ml. | 125 µm | 400 ml. | | | 52850105 |
| | 190 µm | 400 ml. | | | 52850106 |
| 600 ml. | 125 µm | 600 ml. | | | 52850107 |
| | 190 µm | 600 ml. | | | 52850108 |
| 800 ml. | 125 µm | 800 ml. | | | 52850109 |
| | 190 µm | 800 ml. | | | 52850110 |
| 1 Pc. | 50 Pcs. | 50 Pcs. | 1 Pc. | 20 Pcs. | << UNITS |

## ADAPTERS

for Sagola spray guns and other guns on the market.

| 4600 Xtreme | 3300 / 4100 Mini Xtreme Pro XD | Classic Lux | IWATA | | | SATA | DEVILBISS | | | |
|---|---|---|---|---|---|---|---|---|---|---|

Check with the gun manufacturer for the thread type for different models.

# Consumables

## Paper paint-strainers

Paper paint-strainers for fast and perfect filtering of the paint.

Paper paint-strainers with 125 or 190 microns Nylon mesh.

To obtain a quick filtering and a surface without speckles.

Supplied in plastic bag to keep them always clean.

### VERSIONS

| Description | Application | Code |
|---|---|---|
| 190 µm p. p. strainers | Clearcoats / single stage | **40000253** |
| 125 µm p. p. strainers | Waterborne paints | **40000254** |

## Mixing cups and lids

Cups with legs to prevent spillage. Reinforced top edge. Made of polypropylene. High resistance.

### VERSIONS

| Description | Units/Box | Code |
|---|---|---|
| 400 ml. mixing cup | 200 | **40000508** |
| 650 ml. mixing cup | 200 | **40000509** |
| 1,300 ml. mixing cup | 200 | **40000510** |
| 2,300 ml. mixing cup | 175 | **40000511** |

### VERSIONS

| Description | Units/Box | Code |
|---|---|---|
| 400 ml. cup lid | 100 | **40000512** |
| 650 ml. cup lid | 100 | **40000513** |
| 1,300 ml. cup lid | 100 | **40000514** |
| 2,300 ml. cup lid | 100 | **40000515** |

## Mixing cup dispenser

### VERSIONS

| Description | Code |
|---|---|
| 400 ml. mixing cup | **40000517** |
| 650 ml. mixing cup | **40000518** |
| 1,300 ml. mixing cup | **40000519** |
| 2,300 ml. mixing cup | **40000520** |

## Product mixers

Product mixers of 20 and 30 cm. of length.

### VERSIONS

| Description | Units/Box | Code |
|---|---|---|
| 20 x 2 cm. product mixer | 500 | **40000499** |
| 30 x 2 cm. product mixer | 200 | **40000320** |

## Particle removal kit

It is used to remove any particles of dust or dirt that may fall on the fresh paint .

| Code |
|---|
| 40000249 |

## Booth anti-dust. 10 liters

Product for protecting the walls, screens and glass of a spray booth.

- Protects from spray and dust.
- Application with spray gun, roller or brush.
- Transparent and self adhesive layer.
- Clean product.
- Easily removable with water.

| Code |
|---|
| 40000023 |

# C O N T I N U O U S
# I N N O V A T I O N

## IT'S IN OUR **DNA**

SAGOLA®
an Elcometer company

**www.sagola.com**

At **Sagola** company, continuous innovation is fundamental to who we are and the spirit with which we were founded. It's the fulfillment of a dream and the transformation of a concept to reality, resulting in products which challenge expectations.

**SPAIN**
*Urartea, 6 · 01010*
*Vitoria-Gasteiz (Álava) SPAIN*
*Tel.: (+34) 945 214 150*
*sagola@sagola.com*
***www.sagola.com***

*Edición **EN** 1/2023 - 70110102*